Modeling the Influence of e-Learning Usability on National Competency Assessment Readiness among Technical-Vocational and Industrial Technology Students in the Philippines

Kenny John C. Grustan*, Michel C. Grustan, and John Manuel C. Buniel

Department of Industrial Technology, North Eastern Mindanao State University, Surigao del Sur, Philippines
Email: grustankennyjohn@gmail.com (K.J.C.G.); michelconia21st2017@gmail.com (M.C.G.); johncotaresbuniel@gmail.com (J.M.C.B.)
*Corresponding author
Manuscript received October 14, 2025; revised November 12, 2025; accepted December 15, 2025; published May 13, 2026

***Abstract*—Technical-Vocational Education and Training (TVET) plays a pivotal role in shaping a competent labor force, particularly in the Philippines, where curricula are designed to prepare students for National Competency (NC) assessments. While e-learning systems are increasingly adopted to support the theoretical and cognitive preparation for these high-stakes certifications, their effectiveness relies heavily on system design. Distinct from previous research that focuses broadly on general academic achievement, this study addresses a specific gap by examining how system usability specifically translates into readiness for practical skills certification. Grounded in the Technology Acceptance Model (TAM) and Self-Regulated Learning (SRL) frameworks, this study aims to empirically explore the influence of e-Learning System Usability (ESU) on students' Assessment Readiness (AR), and the mediating roles of Digital Learning Engagement (DLE) and Assessment Comprehension (AC). A structural model was proposed through a mixed-methods sequential exploratory design. An online survey yielded 203 valid responses from technical-vocational students in the Philippines. Structural Equation Modeling (SEM) revealed that the direct causal path between usability and readiness was insignificant. However, full mediation was established: usability significantly influenced engagement and comprehension, which in turn drove assessment readiness. These findings suggest that prioritizing usability is a crucial pedagogical strategy. A user-friendly design does not merely deliver content; it fosters the engagement and deep comprehension necessary for students to succeed in national skills certifications.**

***Keywords*—e-learning system usability, digital learning engagement, assessment readiness, Technical-Vocational Education and Training (TVET), Structural Equation Modeling (SEM)**

I. Introduction

Technical-Vocational Education and Training (TVET) is recognized worldwide as a crucial driver of economic development and national competitiveness [1]. In the Philippines, TVET is delivered through various programs preparing learners for National Competency (NC) assessments administered by the Technical Education and Skills Development Authority (TESDA). These centralized, high-stakes assessments validate whether a learner has mastered the specific skills required by industry standards [2]. Consequently, passing these certifications is vital for graduates, significantly enhancing their employability and contributing to the country's human resource competence [3]. To support this, institutions have increasingly integrated e-learning systems to provide better access to training materials and review modules [4, 5].

However, challenges persist in preparing students for demanding assessments like the Electrical Installation and Maintenance (EIM) NC II. Issues such as mismatched curricula, inadequate hands-on materials, and anxiety regarding evaluation methods often serve as barriers to readiness [6, 7]. While traditional instruction sometimes fails to align with the practical nuances of performance-based certifications, e-learning offers a potential solution by providing interactive tools and accessible study materials [8]. Yet, the mere presence of digital tools is insufficient; their effectiveness relies heavily on their design. As TVET students increasingly depend on these platforms, their ability to navigate and comprehend the material is directly influenced by the system's usability [9, 10]. Poorly designed systems can lead to frustration and disengagement, ultimately impeding rather than aiding assessment preparation. In this study, the term preparedness refers to the general state of being equipped with the necessary skills, whereas Assessment Readiness (AR) is operationalized as the specific psychological and behavioral construct reflecting a student's confidence and competence to undergo the National Certification process.

Despite the growing adoption of e-learning in Philippine TVET, there is a need for a deeper understanding of the specific psychological and behavioral pathways through which a technical feature—usability—translates into student preparedness. To address this gap, this study integrates the Technology Acceptance Model (TAM) and Self-Regulated Learning (SRL) theory as its theoretical foundation. TAM posits that perceived ease of use is a primary driver of user behavior [11], while SRL theory suggests that successful learning requires active engagement and deep comprehension of the task requirements [12]. By synthesizing these frameworks, this study argues that usability is not merely a technical convenience but a catalyst that triggers the self-regulated behaviors necessary for mastering competency standards.

Current literature advocates for empirical models that link these digital factors specifically to vocational skill certification [13]. Thus, this study specifically intends to: (1) formulate an integrated conceptual model based on TAM and SRL regarding the influence of e-learning system usability on digital learning engagement, assessment comprehension, and assessment readiness; and (2) empirically test such a model among industrial technology students in the Philippines via

Structural Equation Modeling (SEM).

II. Literature Review

A. Theoretical Framework

To understand how technical features of an e-learning system translate into student preparedness, this study integrates the Technology Acceptance Model (TAM) and Self-Regulated Learning (SRL) theory. TAM suggests that perceived ease of use is a fundamental determinant of whether a user will accept and utilize a system effectively (11). In the context of this study, e-Learning System Usability (ESU) represents this ease of use. However, usability alone does not guarantee learning outcomes. Therefore, the study draws on SRL theory, which posits that learners must actively engage with content and monitor their understanding to achieve mastery [14]. Here, Digital Learning Engagement (DLE) and Assessment Comprehension (AC) serve as the self-regulated processes facilitated by a usable system. The integrated model proposes that usability (TAM) reduces the cognitive load of operating the technology, thereby freeing up mental resources for engagement and comprehension (SRL), which are the proximal precursors to Assessment Readiness (AR).

B. E-Learning System Usability as an Antecedent of Digital Learning Engagement and Assessment Comprehension

E-learning system usability is defined as the degree to which a system enables users to perform tasks effectively, efficiently, and with satisfaction [15]. In the specialized context of Technical and Vocational Education and Training (TVET), usability is critical because the curriculum often bridges complex theoretical concepts with practical application. Recent studies in vocational education emphasize that digital tools must be specifically contextualized to be effective. For instance, Rini *et al.* [16] highlighted that Learning Management Systems (LMS) like Chamilo, when developed with vocational standards in mind, significantly streamline the delivery of web-based instruction. Similarly, Nurhaliza *et al.* [17] demonstrated that specialized learning media (such as Kodular-based apps) enhance instruction in vocational high schools by making abstract informatics concepts more accessible. These findings align with TAM, suggesting that when a system removes technical friction, students can focus on the learning content rather than the interface.

A highly usable system allows learners to concentrate on the learning activities, encouraging prolonged involvement and deeper cognitive processing [9, 18]. This relationship is pivotal: if the interface is intuitive, the "cost" of engagement drops. In a rational sense, usability acts as a direct channel for escalating engagement. Consequently, a user-friendly environment creates an atmosphere where system effectiveness leads to seamless student participation. Hence, the hypothesis below is suggested:

H1: E-learning system usability positively and significantly influences students' digital learning engagement.

Furthermore, the influence of usability extends to the comprehension of assessment criteria. In TVET, understanding the assessment means the student knows the specific competency standards, task characteristics, and evaluation processes required for National Certification [14]. Quality e-learning platforms that are easy to navigate and have well-structured information presentation can significantly enhance this understanding [19, 20]. When students can easily access and process information about assessment standards—without getting lost in a confusing menu structure—their cognitive load decreases [21]. This clarity allows them to focus on understanding the "rules of the game" for their upcoming exams. Thus, improved system usability is assumed to directly facilitate better student comprehension of assessments. Hence, the following hypothesis is laid down:

H2: E-learning system usability positively and significantly influences students' assessment comprehension.

C. Digital Learning Engagement and Assessment Comprehension as an Antecedent of Assessment Readiness

After identifying the factors that significantly influence engagement in digital learning, this research has further explored the extent to which assessment readiness is associated with this engagement. Assessment readiness in the area of Technical and Vocational Education and Training (TVET) means that the learner is fully equipped with the essential theoretical knowledge, practical skills, and the necessary mental characteristics, such as confidence, to successfully carry out national competency assessments [22, 23]. Active digital learning engagement, which involves regular participation, thorough cognitive processing of learning materials, and positive emotional involvement, is considered to have a direct impact on assessment readiness. For instance, consistent behavioral engagement with e-learning materials not only helps the learning of practical skills but also the familiarity with the assessment formats [24, 25]. In contrast, intellectual and emotional engagement can empower the learner with conceptual understanding and the self-assurance required to be successful in the evaluation process [26, 27]. This link, where active student involvement leads to better preparedness, underpins the next hypothesis:

H3: Digital learning engagement positively and significantly influences students' assessment readiness.

In addition to the previous factors of assessment readiness, this investigation examines the impact of understanding the assessment. A student's deep grasp of the assessment standards, ratings, task requirements, and frequent evaluation errors related to national competency assessments reflects their assessment comprehension [28, 29]. Knowing the most essential aspects of assessment thoroughly, often referred to as assessment literacy, is crucial for students to demonstrate confidence and feel prepared. Students are in a better position to channel their learning energy, perform appropriate self-correction, and develop self-efficacy when they fully understand what is expected of them and how their work will be assessed [30–32]. Such transparency helps clarify the particular task at hand, thereby minimizing anxiety among students, which in turn increases their overall mental and practical preparedness for the tests. Thus, it is posited that:

H4: Assessment comprehension positively and significantly influences students' assessment readiness.

D. E-Learning System Usability and Assessment Readiness

Although the impact of e-learning system usability on assessment preparedness, engagement, and understanding is generally expected to be mediated, the theory also suggests a direct positive effect. The high usability of e-learning platforms can positively impact students' capabilities to prepare for assessments by enhancing their technical skills, motivation, and overall satisfaction with the learning process, which are essential factors of readiness [33, 34]. Essentially, an easy and seamless user experience, free from any annoyance, can have a profoundly positive impact on people's cognitive capacity when they are learning or practicing, which is why they may later recall the material used for national competency assessments [35, 36]. Moreover, students' self-confidence and mental readiness for the challenge can be enhanced by the existence of functional systems that provide clear instructions, opportunities for practice, and prompt feedback [37, 38]. Hence, the E-learning setting, if properly structured, may be a facilitator of the student's preparedness. Thus, the following hypothesis is proposed:

H5: E-learning system usability positively and significantly influences students' assessment readiness.

In summary, the research hypotheses developed in this study are visually represented in the proposed conceptual framework, as illustrated in Fig. 1.

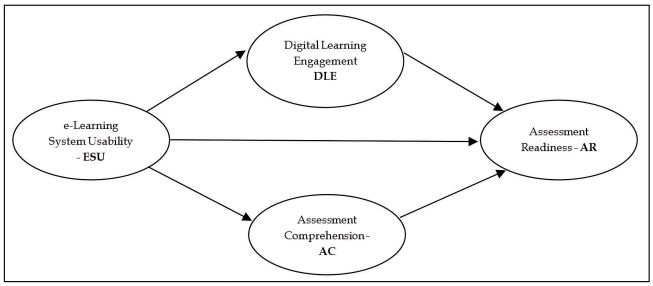

Fig. 1. Proposed conceptual framework.

III. Materials and Methods

A. Methodology

This study was conducted to investigate the impact of e-learning system usability on digital learning engagement, assessment comprehension, and assessment readiness among technical and vocational students preparing for National Certificate (NC) qualifications. A mixed-methods sequential exploratory design was utilized to develop and validate the proposed structural model. SEM studies typically adopt this approach to ensure that constructs are theoretically grounded and empirically validated. The qualitative phase involved identifying key constructs and developing initial measurement items through a review of the literature and preliminary interviews. For the qualitative phase, preliminary interviews were conducted with TVET instructors and students to identify context-specific themes. The verbal data were analyzed using Thematic Analysis following the six-step framework by Braun and Clarke [39]. Transcripts were coded to generate initial categories which were then mapped to the theoretical constructs of TAM and SRL. To ensure trustworthiness, member checking was performed where participants reviewed the extracted themes for accuracy. These were then refined and validated through confirmatory factor analysis during the quantitative phase of the study. This two-stage methodology enhances the validity and reliability of the measurement model before testing the structural paths in SEM. In the present study, qualitative insights derived from literature and interview data in the TVET context informed the generation of hypotheses. These findings were then synthesized to propose the hypotheses and the conceptual framework or structural model presented in the literature review section (see Fig. 1).

For the quantitative validation of the structural model, a survey questionnaire was administered to technical-vocational and industrial technology students enrolled in North Eastern Mindanao State University in the Philippines. The selection of participants was achieved using a convenience sampling method, chosen for its practical advantages and cost efficiency in data collection. To reach potential respondents, the survey link was disseminated through various channels, including relevant student social media groups, online forums frequented by TVET students, and official institutional communication platforms. Collaboration with faculty members and student organizations was also undertaken to ensure broader dissemination of the survey. Prospective participants were carefully screened to confirm they met the study's inclusion criteria, and informed consent was obtained before they participated in the survey. Furthermore, respondents were encouraged to share the survey details with other eligible peers. The criteria for inclusion stipulated that participant must: (a) consent to their data being utilized for research and publication; (b) be currently enrolled in either the Bachelor of Science in Industrial Technology or Bachelor of Technical-Vocational Teacher Education program; (c) be preparing for or have recently undertaken a national competency assessment; and (d) have experience using e-learning systems or e-reviewers for their studies.

Table 1. Distribution of respondents

Profile	Category	*N*	%
Age (Years)	18	40	19.70
	19	59	29.06
	20	42	20.69
	21	13	6.40
	22	19	9.36
	23	20	9.85
	24	5	2.46
	25 and above	5	2.46
Sex	Male	191	94.09
	Female	12	5.91
Year level	1st	193	95.07
	2nd	10	4.93
Degree program	Bachelor of Science in Industrial Technology	193	95.07
	Bachelor of Technical-Vocational Teacher Education	10	4.93

The demographic and academic characteristics of the respondents are detailed in Table 1. This table outlines the distribution of the 203 participating students based on age, sex, year level, and specific degree program. The majority of students were aged 19 (29.06%), followed by those aged 20 (20.69%), with the age group 18–22 collectively representing a significant portion of the sample (75.85%). In terms of sex,

males (94.09%) constituted the predominant group. First-year students (95.07%) formed the largest cohort by year level. Regarding degree programs, students from the Bachelor of Science in Industrial Technology (95.07%) comprised the majority of respondents.

B. Research Instruments

The survey instrument comprised three sections. The first detailed the informed consent, outlining the study's purpose, procedures, potential risks, confidentiality measures, and benefits, with statements reviewed and approved by student representatives. The second section collected demographic and academic information (sex, year level, degree program, and age) and included screening questions. These confirmed participants were preparing for or had undertaken a national competency assessment (e.g., EIM NC II) and had experience with e-learning systems or E-reviewers, with affirmative responses required for eligibility. The final section assessed students' perceived levels of ESU, DLE, AC, and AR. Constructs were operationalized via a literature review (see Table A1). To ensure content validity, the initial draft of the questionnaire underwent expert validation by three distinct experts: an educational technologist, a TVET curriculum planner, and a psychometrician. Their feedback was incorporated to refine the terminology, ensuring it aligned with the specific context of National Competency assessments. The instrument utilized a five-point Likert scale.

1) Data gathering procedure

This study was conducted in strict adherence to the ethical protocols established by the Research and Development Office of North Eastern Mindanao State University. Ethical approval was granted under the institutional review oversight for social science research (Protocol/Ref: NEMSU-RDO-2025-04). Informed consent was obtained from all participants prior to data collection. The survey was disseminated using Google Forms from April to May 2025. The study employed a convenience sampling technique. While the authors acknowledge that this non-probability method limits the ability to generalize results to the entire population of TVET students in the Philippines, it was chosen for its practical efficiency in reaching a specific, hard-to-access demographic—industrial technology students actively preparing for certification—during the academic term. To mitigate selection bias and ensure diversity, the survey link was distributed through multiple distinct channels, including student organizations, official faculty-moderated groups, and cross-institutional forums. This approach ensured that the sample, though convenience-based, captured a broad cross-section of the target population's experiences.

C. Data Analysis

This study employed SPSS version 26 and AMOS 26.0 for data analysis. Descriptive statistics were used to summarize the categorical data obtained from the survey. At the same time, Confirmatory Factor Analysis (CFA) was conducted to validate the measurement model and establish its construct validity, internal consistency, and dimensionality. The Fornell-Larcker criterion served as a reference to provide evidence of its discriminant validity. Lastly, Structural Equation Modeling (SEM) was performed to evaluate the structural model and test the hypothesized relationships. The final sample size of N = 203 satisfies the minimum requirements for Structural Equation Modeling. According to Hair *et al.* [40], a critical mass of 200 is recommended for providing a sound basis for estimation. Furthermore, the sample exceeds the 10-times rule [41], which suggests having 10 times as many respondents as the maximum number of structural paths directed at a particular construct in the model.

IV. Result

A. Measurement Model Assessment

Confirmatory Factor Analysis (CFA) was done by using the maximum likelihood method. This method was selected due to its effectiveness in experiments with a large number of samples [42]. At the very first step, the criteria for the model-data fit were checked through *t*-values and standardized factor loadings (SFL) for each item. The observed *t*-values ranged from 6.316 (EUS1) to 10.829 (AR1), while SFLs ranged from 0.572 (EUS1) to 0.904 (AC2) (see Fig. 2 and Table 2). According to the suggestions given by Hair *et al*. [40] and Kline [43], every *t*-value was greater than or equal to 1.96, and every SFL was higher than 0.5; therefore, there were no items deleted.

Table 2. Convergent validity and internal consistency results of the measurement model

Constructs	Item	*t*-value	SFL	AVE	AVE^2	Composite reliability
E-Learning System Usability (ESU)	ESU1	6.316	0.572	0.509	0.713	0.837
	ESU2	8.942	0.802			
	ESU3	7.955	0.712			
	ESU4	7.698	0.690			
	ESU5		0.767			
Digital Learning Engagement (DLE)	DLE1	7.649	0.788	0.559	0.748	0.835
	DLE2	7.814	0.813			
	DLE3	7.079	0.714			
	DLE4		0.667			
Assessment Comprehension (AC)	AC1	9.944	0.687	0.627	0.792	0.833
	AC2	7.925	0.904			
	AC3		0.769			
Assessment Readiness (AR)	AR1	10.829	0.848	0.668	0.818	0.890
	AR2	10.559	0.831			
	AR3	9.933	0.792			
	AR4		0.798			

Subsequently, five Goodness-of-Fit Indices (GFIs) were examined to evaluate the overall fit of the measurement model, as shown in Table 3. The results confirmed an acceptable model fit without requiring any modifications,

with CFI = 0.936, TLI = 0.922, RMSEA = 0.073, SRMR = 0.0552, and a Chi-square/df Ratio of 1.724. All five indices met their respective acceptable thresholds as suggested by Hair *et al.* [40], indicating the model strongly fits the sample data.

Table 3. Measurement model data fit indices results

Model fit indices	Proposed threshold value	Source	Resulting value
CFI	> 0.90	Hair *et al.* (2009) [40]	0.936
TLI	> 0.90	Hair *et al.* (2009) [40]	0.922
RMSEA	< 0.08	Hair *et al.* (2009) [40]	0.073
SRMR	≤ 0.08	Hair *et al.* (2009) [40]	0.0552
Chi-square/df Ratio	< 3.00	Hair *et al.* (2009) [40]	1.724

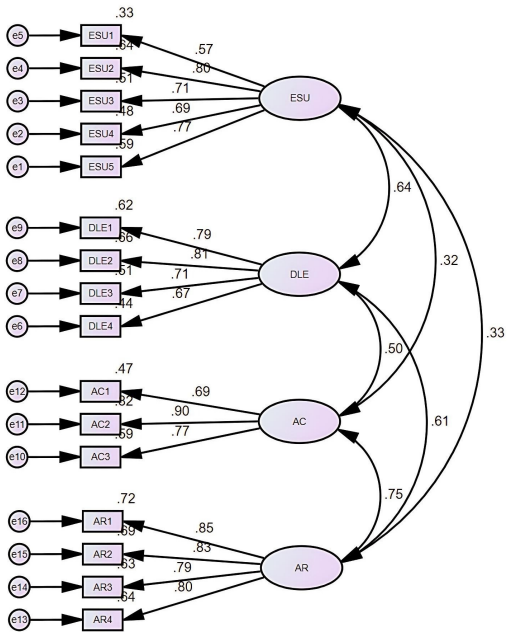

Fig. 2. Confirmatory factor analysis results.

The convergent validity and internal consistency of the measurement model were then evaluated. Convergent validity was demonstrated as shown in Table 2, with the Average Variance Extracted (AVE) for each construct (ESU = 0.509, DLE = 0.559, AC = 0.627, AR = 0.668) all above the suggested 0.50 value. Internal consistency has been validated, with the Composite Reliability (CR) value for each latent variable (ESU = 0.837, DLE = 0.835, AC = 0.833, AR = 0.890) all above the threshold of 0.70 [40] used as a benchmark. Eventually, the discriminant validity was confirmed through the Fornell-Larcker criterion. This point of view suggests that the correlation of any construct with another should be lower than the square root of its AVE. Such a measure ensures that there are no overlaps between the constructs. The analysis shown in Table 4 confirms that for each of the four constructs, the square root of its AVE consistently exceeded the inter-construct correlation coefficients, thus establishing discriminant validity.

Table 4. Discriminant validity results (Fornell-Larcker criterion)

Variable	ESU	DLE	AC	AR
ESU	**0.713**			
DLE	0.641	**0.748**		
AC	0.323	0.497	**0.792**	
AR	0.333	0.614	0.745	**0.818**

The square root of AVE is shown on the diagonal of the matrix in bold; inter-construct correlation is shown off the diagonal.

B. Structural Model Assessment

The proposed structural model and the corresponding hypotheses were tested using Structural Equation Modeling (SEM) to assess the model's validity. As presented in Table 5 and illustrated in Fig. 3, the results indicated that four of the five proposed hypotheses were supported.

Table 5. Structural model estimates

Hypothesized path		Standardized beta (β)	*t*-value (CR.)	*p*-value	Decision
H_1	ESU → DLE	0.662	5.581	***	Supported
H_2	ESU → AC	0.368	3.596	***	Supported
H_3	DLE → AR	0.456	3.689	***	Supported
H_4	AC → AR	0.634	6.277	***	Supported
H_5	ESU → AR	−0.158	−1.344	0.179	Not Supported

**** denotes p < 0.001**

Specifically, E-Learning System Usability (ESU) was found to have a positive and significant influence on both Digital Learning Engagement (DLE) (βH1 = 0.662, $t = 5.581$, $p < 0.001$) and Assessment Comprehension (AC) (βH2 = 0.368, $t = 3.596$, $p < 0.001$). The model explained 43.8% of the variance in DLE and 13.5% of the variance in AC. Additionally, both mediating variables significantly predicted Assessment Readiness (AR). Digital Learning Engagement had a positive and significant influence on AR (βH3 = 0.456, $t = 3.689$, $p < 0.001$), and Assessment Comprehension also had a positive and significant influence on AR (βH4 = 0.634, $t = 6.277$, $p < 0.001$). Collectively, the predictors in the model explained a substantial 60.7% of the variance in Assessment Readiness.

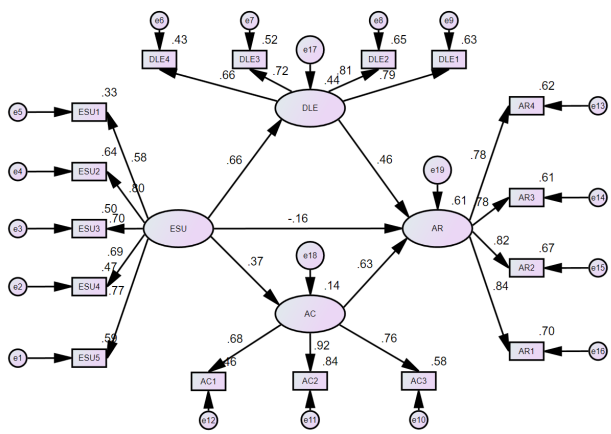

Fig. 3. Structural equation modeling results.

However, the direct path from ESU to AR (βH5 = −0.158, t = −1.344, p = 0.179) was not statistically significant. This finding indicates that DLE and AC fully mediate the relationship between e-learning System Usability and Assessment Readiness. Fig. 4 presents the final structural model with the non-significant path from ESU to AR removed.

C. Mediation Analysis

To validate the mediating roles of DLE and AC, a bootstrapping analysis was conducted using AMOS (with 2000 samples and 95% bias-corrected confidence intervals). This method provides a rigorous estimation of indirect effects, addressing the limitations of the causal steps approach.

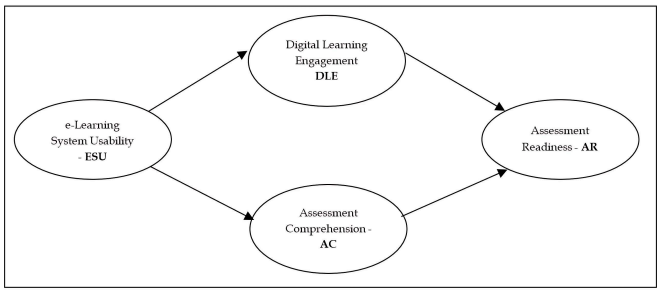

Fig. 4. Final structural model.

As presented in Table 6, the total standardized indirect effect of ESU on AR through the mediating variables was 0.535. The bootstrapping results indicated that this effect is statistically significant (p = 0.001), with a 95% confidence interval ranging from 0.272 to 0.970. Importantly, this confidence interval does not straddle zero, confirming the robustness of the mediation.

Table 6. Mediation analysis results

Hypothesized Indirect Path	Standardized Indirect Effect (β)	95% CI Lower Bound	95% CI Upper Bound	*p*-value	Decision
ESU → DLE / AC → AR (Total Indirect)	0.535	0.272	0.970	0.001	Supported

V. Discussion

In the context of the increasing integration of e-learning in Technical and Vocational Education and Training (TVET), the present study aimed to determine how the usability of e-learning systems shapes students' digital learning engagement, assessment comprehension, and ultimately their assessment readiness for national competency assessments. The proposed structural model was grounded in the Technology Acceptance Model (TAM) and Self-Regulated Learning (SRL) frameworks, highlighting the interconnected roles of system design and student-centered learning processes. Given the limited empirical models in the TVET domain that specifically map these pathways, an empirical validation was necessary to guide institutional practice and contribute to the theoretical understanding of how usability translates into student preparedness.

The results revealed that ESU positively and significantly influenced students' DLE, supporting H_1. This finding aligns with recent studies confirming the close connection between software ease of use and student engagement [9, 10]. Cognitively, a user-friendly system minimizes unnecessary mental load, allowing students to concentrate on the content rather than fighting with the technology [20, 44]. Affectively, a frustration-free experience instills satisfaction and motivation, which are critical sources of continuous engagement [19, 45]. Essentially, when an E-learning tool is intuitive, it lowers the barrier to entry, enabling students to involve themselves in the learning process not only behaviorally but also intellectually and emotionally. This aligns with recent findings by Wagino *et al.* [46], who emphasized that motivation and active participation in E-learning environments are critical precursors to academic achievement and critical thinking.

Similarly, the research found that ESU is a major positive predictor of AC, providing support for H_2. A user-friendly system offers more than just information display; it facilitates the development of evaluation literacy. Within the rigorous atmosphere of TVET, usability becomes a direct path to comprehension, as students must grasp complex performance-based criteria [47]. As demonstrated by Krebs *et al.* [48], a well-designed interface clarifies the goals and intricate scoring rubrics, thereby reducing extraneous cognitive load. This transparency enables students to focus their mental resources on understanding the "rules of the game," which is the foundation for self-regulated competency development [49].

The study also demonstrated that DLE is a significant predictor of AR, supporting H_3. This result reinforces a basic principle in educational technology: active engagement is the precursor to readiness. Addressing the concern regarding the relevance of digital tools for manual skills certification, the findings posit that "readiness" is as much a psychological state as it is a physical capability. While the National Certificate (e.g., EIM NC II) assesses hands-on proficiency, the mental framework for those skills—knowing the sequence of operations and reducing performance anxiety—can be effectively cultivated digitally. A highly usable E-reviewer acts as a mental simulator. By allowing students to repeatedly rehearse the process and standards without the logistical constraints of a physical workshop, the system builds the cognitive readiness necessary for the actual exam.

Furthermore, the analysis revealed a substantial positive effect of AC on AR, supporting H_4. This finding demonstrates that preparation for a national competency test requires not only technical skill but also a deep understanding of the assessment's guidelines. A lack of understanding can hinder even skilled students, as they may fail to demonstrate their abilities correctly due to misinterpreted tasks [50]. Clark [12] notes that knowing the specific assessment criteria allows learners to set clear goals and self-correct. This clarity demystifies the high-stakes environment, enhancing the psychological dimension of readiness by boosting confidence and reducing the anxiety that often hinders performance [51].

Finally, the bootstrapping analysis (Table 6) provides critical insight into the mechanism of full mediation. The significant indirect effect (β = 0.535, p = 0.001) confirms that e-learning system usability is not a direct driver of assessment readiness, but instead acts as a foundational enabler. Unlike general higher education studies, which often find a direct link between system quality and academic

performance, this study reveals a more nuanced pathway specific to the TVET context. The non-significant direct path indicates that for technical-vocational students, usability is a 'hygiene factor'—it prevents frustration but does not inherently build competence. Competence is only built when that usability successfully triggers active cognitive processing (engagement) and clarifies the complex rubric of the national assessment (comprehension). This distinction is vital for policymakers: investing in user-friendly platforms is justified because "usable" is the prerequisite for the deep engagement required for skill mastery.

VI. Conclusion

The research investigates the influence of E-learning system usability on the assessment readiness of technical-vocational students preparing for national competency assessments. The findings dismantle the assumption that a high-quality system directly translates to preparedness. Instead, the study confirms a full mediation model: usability acts solely as a catalyst that triggers digital learning engagement and assessment comprehension.

Theoretically, this study validates an integrated framework combining the Technology Acceptance Model (TAM) and Self-Regulated Learning (SRL) within the TVET context. It demonstrates that while TAM explains the acceptance of the tool (via usability), SRL explains the process of readiness (via engagement and comprehension). This contributes to the literature by proving that in vocational education, technical features are inert unless they successfully activate the student's psychological and behavioral involvement.

For policy and practice, specifically for bodies like TESDA and TVET institutions, the implications are specific and actionable:

1) Standardization of Usability: TESDA should extend its accreditation standards for E-learning materials. Beyond verifying the accuracy of technical content, there should be a "Digital Usability Standard" that mandates intuitive navigation and interface design to minimize cognitive load.
2) Pedagogical Training for Instructors: Institutions should shift their focus to training. Instructors should be trained not only to operate the software, but also to utilize these platforms to foster Assessment Literacy specifically. The goal should be to use the E-reviewer to demystify the "rules" of the NC II assessment, rather than treating it as a repository of files.
3) Design Priority: Developers of TVET E-learning systems must prioritize "Assessment Comprehension" features—such as clear rubrics, instant feedback on errors, and visual cues for progress—over purely aesthetic elements.

In conclusion, a usable e-learning system does not replace the workshop, but it prepares the mind for it. By lowering technological barriers, we allow students to focus on mastering the competency standards, ensuring they face their national assessment with confidence, clarity, and genuine readiness. Future investigations employing stratified sampling will be essential to extend these findings across the diverse TVET landscape, validating this model beyond the current sample.

While this study offers valuable insights, several limitations must be acknowledged. First, the study employed a convenience sampling technique at a single institution, resulting in a sample predominantly composed of male students (94.09%) and first-year students (95.07%). While this demographic profile reflects the current enrolment trends in industrial technology programs in the specific locale, it limits the generalizability of the findings to the broader, more diverse TVET population. Second, the study relied on self-reported measures of readiness, which may be subject to social desirability bias.

Future research should build upon these findings by addressing these limitations and exploring new avenues of inquiry. To improve generalizability, future studies should employ stratified sampling methods to include a greater number of female students, higher-year cohorts, and participants from multiple institutions. This would enable subgroup analyses to reveal how the influence of E-learning usability on readiness varies across student cohorts.

Methodologically, to strengthen causal interpretations beyond the cross-sectional data presented here, longitudinal and experimental designs should be incorporated. A longitudinal approach could track how students' engagement and comprehension evolve throughout a full review period. At the same time, an experimental study could compare the assessment readiness outcomes of students using E-reviewers of varying usability against those using traditional study methods. Furthermore, to mitigate biases associated with self-reported data, future studies should integrate objective measures of assessment readiness—such as performance on mock competency tests or actual scores on the National Certificate II assessment—and triangulate these with system usage analytics, such as time on task.

Finally, introducing qualitative methods, like focus group discussions or in-depth interviews, would provide richer insights into the student experience. This could reveal why certain usability features promote engagement and how students translate their enhanced comprehension into tangible confidence. It is also crucial to examine the potential negative effects of over-reliance on E-reviewers, such as a possible decline in deep conceptual understanding in favor of rote memorization. These methodological and conceptual enhancements will contribute to stronger causal evidence and a more nuanced understanding of the role of E-learning usability in TVET student success.

Appendix

Table A1. Constructs of the instruments with the items assigned and their corresponding sources

Construct	Item code and statement	No. of items	References (Theoretical Anchors)
E-Learning System Usability (ESU)	ESU1. The content in the app loads quickly and functions reliably.	5	[11, 15, 52]
	ESU2. Using the E-reviewer app helps me focus better on the key assessment topics.		

	ESU3. The app's features (e.g., quiz timer, scoring) support my practice and self-assessment.		
	ESU4. I feel satisfied using the e-reviewer app during my EIM preparation.		
	ESU5. The app's responsiveness encourages me to use it more often in my study sessions.		
Digital Learning Engagement (DLE)	DLE1. I regularly use the e-reviewer app as part of my study routine.	4	[53–55]
	DLE2. I feel motivated to complete more practice tasks using the e-reviewer.		
	DLE3. I concentrate well when working through digital review activities.		
	DLE4. I actively apply what I learn from the E-reviewer to real-world electrical tasks.		
Assessment Comprehension (AC)	AC1. I am aware of the common errors or mistakes that can result in point deductions during the exam.	3	[56–59]
	AC2. I can mentally rehearse how to perform each task that may appear in the assessment.		
	AC3. I am familiar with how assessors score each performance task in the practical test.		
Assessment Readiness (AR)	AR1. I feel fully prepared to take the EIM NC II practical assessment.	4	[59–62]
	AR2. I have practiced all the required competencies assessed in the certification exam.		
	AR3. I feel confident that I can pass the EIM NC II assessment on my first attempt.		
	AR4. I have developed strategies to stay focused during the assessment.		

CONFLICT OF INTEREST

The authors declare no conflict of interest.

AUTHOR CONTRIBUTIONS

K.J.C.G.: Conceptualization, Data curation, Formal analysis, Investigation, Methodology, Project administration, Resources, Software, Visualization, Writing—original draft. M.C.G.: Writing—review & editing, Supervision. J.M.C.B.: Conceptualization, Validation, Writing—review & editing. All authors had approved the final version.

REFERENCES

[1] S. Amin, "Technical and Vocational Education (TVE): Role in individual and national growth," *International Journal of Computer Applications Technology and Research*, vol. 10, no. 9, pp. 323–326, 2021. doi: 10.7753/ijcatr1009.1001

[2] J. M. Francisco and N. Jasmin, "Evaluating the Philippine TVET competency assessment and certification system using SERVQUAL model," *Journal of Technical Education and Training*, vol. 15, no. 3, 2023. doi: 10.30880/jtet.2023.15.03.005

[3] I. N. A. Generalao, J. M. Balaoro, P. J. M. Lorenzo, and J. P. R. Rivera, "Examining the effects of Technical Vocational Education and Training (TVET) on employment outcomes in the Philippines (DP 2025-08)," *Philippine Institute for Development Studies*, 2025. doi: 10.62986/dp2025.08

[4] M. Dumaua-Cabauatan, S. C. Calizo, F. M. A. Quimba, and L. C. Pacio, "E-education in the Philippines: The case of technical education and skills development authority online program," *Philippine Institute for Development Studies (PIDS), PIDS Discussion Paper Series*, 2018.

[5] R. Rabiman, M. Nurtanto, and N. Kholifah, "Design and development E-learning system by Learning Management System (LMS) in vocational education," *International Journal of Scientific & Technology Research*, vol. 9, no. 2, pp. 1059–1063, 2020.

[6] G. M. Gambi and O. C. Alonsabe, "Examining and validating summative tests used in competency-based assessment for TESDA Technology Institutions (TTI): Basis for training design," *International Journal of Research and Innovation in Social Science*, vol. 8, no. 7, pp. 312–326, 2024. doi: 10.47772/IJRISS.2024.807074

[7] S. Yusop, M. Rasul, R. Yasin, and H. Hashim, "Identifying and validating vocational skills domains and indicators in classroom assessment practices in TVET," *Sustainability*, vol. 15, no. 6, 5195, 2023. doi: 10.3390/su15065195

[8] B. Lawal, M. M. Elzahaf, A. S/R. Anka, and B. Idris, "Assessment of technical and vocational trainers' competence to adopt e-learning technologies into TVET curriculum implementation in higher education institutions," *Global Journal of Engineering and Technology Advances*, vol. 8, no. 2, pp. 68–75, 2021. doi: 10.30574/gjeta.2021.8.2.0126

[9] A. Almusharraf, "An investigation of university students' perceptions of learning management systems: Insights for enhancing usability and engagement," *Sustainability*, vol. 16, no. 22, 10037, 2024. doi: 10.3390/su162210037

[10] K. Dahleez, A. El-Saleh, A. Alawi, and F. Fattah, "Student learning outcomes and online engagement in times of crisis: The role of E-learning system usability and teacher behavior," *The International Journal of Information and Learning Technology*, vol. 38, no. 5, pp. 493–509, 2021. doi: 10.1108/ijilt-04-2021-0057

[11] F. D. Davis, "Perceived usefulness, perceived ease of use, and user acceptance of information technology," *MIS Quarterly*, vol. 13, no. 3, pp. 319–340, 1989. doi: 10.2307/249008

[12] I. Clark, "Formative assessment: Assessment is for self-regulated learning," *Educational Psychology Review*, vol. 24, no. 2, pp. 205–249, 2012. doi: 10.1007/s10648-011-9191-6

[13] J. Valverde-Berrocoso, M. Del C. Garrido-Arroyo, C. Burgos-Videla, and M. B. Morales-Cevallos, "Trends in educational research about E-Learning: A systematic literature review (2009–2018)," *Sustainability*, vol. 12, no. 12, 5153, 2020. doi: 10.3390/su12125153

[14] X. Zhu and C. Evans, "Enhancing the development and understanding of assessment literacy in higher education," *European Journal of Higher Education*, vol. 14, no. 1, pp. 80–100, 2022. doi: 10.1080/21568235.2022.2118149

[15] ISO 9241-11. (2018). Ergonomics of human-system interaction—Part 11: Usability: Definitions and concepts. *International Organization for Standardization.* [Online]. Available: https://www.iso.org/standard/63500.html

[16] F. Rini, A. L. Weay, R. Novita, and R. Illahi, "Chamilo LMS for web-based E-learning development in a vocational high school," *Journal of Computer-Based Instructional Media*, vol. 2, no. 2, pp. 118–126, 2024. doi: 10.58712/jcim.v2i2.138

[17] S. Nurhaliza, N. Effendi, and F. Farida, "Kodular-based learning media: Enhancing instruction on informatics education to vocational high school students," *Journal of Computer-Based Instructional Media*, vol. 3, no. 1, pp. 1–15, 2025. doi: 10.58712/jcim.v3i1.133

[18] A. Pandita and R. Kiran, "The technology interface and student engagement are significant stimuli in sustainable student satisfaction," *Sustainability*, vol. 15, no. 10, 7923, 2023. doi: 10.3390/su15107923

[19] D. Al-Fraihat, M. Joy, R. Masa'deh, and J. Sinclair, "Evaluating E-learning systems' success: An empirical study," *Computers in Human Behavior*, vol. 102, pp. 67–86, Jan. 2020. doi: 10.1016/j.chb.2019.08.004

[20] X. Xin, S. Tianlei, and L. Chao, "Analyzing students' perceptions of information communication channels as e-learning platforms in higher education," *Profesional de la Información*, 2025. doi:

10.3145/epi.2024.ene.0605

[21] P. Vlachogianni and N. Tselios, "The relationship between perceived usability, personality traits and learning gain in an E-learning context," *The International Journal of Information and Learning Technology*, vol. 39, no. 1, pp. 17–31, 2022. doi: 10.1108/ijilt-08-2021-0116

[22] M. Rasul, H. Hashim, R. Yasin, and S. Yusop, "Identifying and validating vocational skills domains and indicators in classroom assessment practices in TVET," *Sustainability*, vol. 15, no. 6, 5195, 2023. doi: 10.3390/su15065195

[23] K. Jackson, J. Li, S. Leupold, and D. Matthews, "Impact of competency-based skills assessments on student performance, stress, and preparedness in an Advanced Pharmacy Practice Experience (APPE) readiness course," *American Journal of Pharmaceutical Education*, 101401, 2025. doi: 10.1016/j.ajpe.2025.101401

[24] M. Çali, B. Ippoliti, and L. Lazimi, "Relationship between student engagement and academic performance," *International Journal of Evaluation and Research in Education (IJERE)*, vol. 13, no. 4, pp. 2085–2095, 2024. doi: 10.11591/ijere.v13i4.28710

[25] M. Gierl, C. Epp, C. Lu, and O. Bulut, "Impacts of engagement on academic outcomes in technology-enhanced learning," *Distance Education*, 2024. doi: 10.1080/01587919.2024.2373297

[26] R. Gul, M. Zeb, and H. Khan, "The effect of students' cognitive and emotional engagement on students' academic success and academic productivity," *Journal of Social Sciences Review*, vol. 3, no. 1, pp. 141–155, 2023. doi: 10.54183/jssr.v3i1.141

[27] E. Omutange and V. Barasa, "Affective-cognitive teaching approach affect on the behavioural engagements, academic achievement, and self-efficacy of technical and vocational students," *Education Journal*, vol. 14, no. 2, 2025. doi: 10.11648/j.edu.20251402.12

[28] C. Chan and J. Luo, "Investigating student preparedness for holistic competency assessment: Insights from the Hong Kong context," *Assessment & Evaluation in Higher Education*, vol. 47, no. 4, pp. 636–651, 2021. doi: 10.1080/02602938.2021.1939857

[29] K. Matshedisho, "Straddling rows and columns: Students' (mis)conceptions of an assessment rubric," *Assessment & Evaluation in Higher Education*, vol. 45, no. 2, pp. 169–179, 2020. doi: 10.1080/02602938.2019.1616671

[30] J. Ponomariovienė, F. Torterat, and D. Jakavonytė-Staškuvienė, "Implementing competency-based education through the personalized monitoring of primary students' progress and assessment," *Education Sciences*, vol. 15, no. 2, 252, 2025. doi: 10.3390/educsci15020252

[31] D. Alt, L. Naamati-Schneider, and D. Weishut, "Competency-based learning and formative assessment feedback as precursors of college students' soft skills acquisition," *Studies in Higher Education*, vol. 48, no. 12, pp. 1901–1917, 2023. doi: 10.1080/03075079.2023.2217203

[32] K. Shateri, N. Shokrpour, M. Amini, and A. Hayat, "Relationships between academic self-efficacy, learning-related emotions, and metacognitive learning strategies with academic performance in medical students: A structural equation model," *BMC Medical Education*, vol. 20, p. 55, 2020. doi: 10.1186/s12909-020-01995-9

[33] M. Zine, F. Harrou, Y. Sun, M. Bellahcene, M. Terbeche, and A. Dairi, "E-learning readiness assessment using machine learning methods," *Sustainability*, vol. 15, no. 11, 8924, 2023. doi: 10.3390/su15118924

[34] W. Wagiran, S. Suharjana, F. Mutohhari, and M. Nurtanto, "Determining the e-learning readiness of higher education students: A study during the COVID-19 pandemic," *Heliyon*, vol. 8, no. 11, e11160, 2022. doi: 10.1016/j.heliyon.2022.e11160

[35] C. Lange, "The relationship between e-learning personalisation and cognitive load," *Open Learning: The Journal of Open, Distance and E-Learning*, vol. 38, no. 3, pp. 228–242, 2021. doi: 10.1080/02680513.2021.2019577

[36] M. K. Afify, "Effect of interactive video length within e-learning environments on cognitive load, cognitive achievement, and retention of learning," *Turkish Online Journal of Distance Education*, vol. 21, no. 4, pp. 133–148, 2020. doi: 10.17718/TOJDE.803360

[37] R. Yñiguez-Ovando, M. Castro-Nuño, M. Sanz-Díaz, L. López-Valpuesta, and J. Castillo-Manzano, "Evaluating the design of digital tools for the transition to an E-continuous assessment in higher education," *Journal of Computing in Higher Education*, vol. 35, no. 3, pp. 821–839, 2023. doi: 10.1007/s12528-023-09381-2

[38] C. Flowers, F. Martin, and B. Stamper, "Examining student perception of readiness for online learning: Importance and confidence," *Online Learning*, vol. 24, no. 2, pp. 38–58, 2020. doi: 10.24059/olj.v24i2.2053

[39] V. Braun and V. Clarke, "Using thematic analysis in psychology," *Qualitative Research in Psychology*, vol. 3, no. 2, pp. 77–101, 2006. doi: 10.1191/1478088706qp063oa

[40] J. F. Hair, W. C. Black, B. J. Babin, and R. E. Anderson, *Multivariate Data Analysis*, Upper Saddle River, NJ: Pearson Education, 2009.

[41] D. Barclay, C. Higgins, and R. Thompson, "The Partial Least Squares (PLS) approach to causal modeling: Personal computer adoption and use as an illustration," *Technology Studies*, vol. 2, no. 2, pp. 285–309, 1995.

[42] S. Tarima and N. Flournoy, "Asymptotic properties of maximum likelihood estimators with sample size recalculation," *Statistical Methods in Medical Research*, vol. 28, no. 12, pp. 3739–3752, 2019. doi: 10.1177/0962280218816008

[43] R. B. Kline, *Principles and Practice of Structural Equation Modeling*, 4th ed., New York, NY: The Guilford Press, 2016.

[44] D. Hariyanto, M. Triyono, and T. Köhler, "Usability evaluation of personalized adaptive e-learning system using USE questionnaire," *Knowledge Management & e-Learning: An International Journal*, vol. 12, no. 1, pp. 35–51, 2020. doi: 10.34105/j.kmel.2020.12.005

[45] J. Li, M. Jin, and X. Chen, "Understanding continued use of smart learning platforms: Psychological wellbeing in an extended TAM-ISCM model," *Frontiers in Psychology*, vol. 16, 2025. doi: 10.3389/fpsyg.2025.1521174

[46] W. Wagino, Habibullah, I. Nasution, M. Giatman, R. D. Koto, A. D. Samala, S. Criollo-C, and K. C. Polin, "Enhancing academic achievement and critical thinking through e-learning: Exploring motivation, creativity, participation, and gadget utilization in higher education," *International Journal of Information and Education Technology*, vol. 14, no. 12, pp. 1679–1687, 2024. doi: 10.18178/ijiet.2024.14.12.2238

[47] S. Yusop, R. Yasin, M. Rasul, N. Jalaludin, and H. Hashim, "An assessment approaches and learning outcomes in technical and vocational education: A systematic review using PRISMA," *Sustainability*, vol. 14, no. 9, 5225, 2022. doi: 10.3390/su14095225

[48] R. Krebs, B. Rothstein, and J. Roelle, "Rubrics enhance accuracy and reduce cognitive load in self-assessment," *Metacognition and Learning*, vol. 17, no. 2, pp. 627–650, 2022. doi: 10.1007/s11409-022-09302-1

[49] Ł. Tomczyk, K. Potyrała, A. Włoch, J. Wnęk-Gozdek, and N. Demeshkant, "Evaluation of the functionality of a new e-learning platform vs. previous experiences in e-learning and the self-assessment of own digital literacy," *Sustainability*, vol. 12, no. 23, 10219, 2020. doi: 10.3390/su122310219

[50] T. Heydarnejad, F. Tagavipour, I. Patra, and A. F. Khafaga, "The impacts of performance-based assessment on reading comprehension achievement, academic motivation, foreign language anxiety, and students' self-efficacy," *Language Testing in Asia*, vol. 12, no. 1, p. 54, 2022. doi: 10.1186/s40468-022-00202-4

[51] C. Chan and J. Luo, "A four-dimensional conceptual framework for student assessment literacy in holistic competency development," *Assessment & Evaluation in Higher Education*, vol. 46, no. 3, pp. 451–466, 2020. doi: 10.1080/02602938.2020.1777388

[52] W. H. DeLone and E. R. McLean, "The DeLone and McLean model of information systems success: A ten-year update," *Journal of Management Information Systems*, vol. 19, no. 4, pp. 9–30, 2003. doi: 10.1080/07421222.2003.11045748

[53] J. A. Fredricks, P. C. Blumenfeld, and A. H. Paris, "School engagement: Potential of the concept, state of the evidence," *Review of Educational Research*, vol. 74, no. 1, pp. 59–109, 2004. doi: 10.3102/00346543074001059

[54] M. D. Dixson, "Measuring student engagement in the online course: The Online Student Engagement Scale (OSE)," *Online Learning*, vol. 19, no. 4, pp. 143–157, 2015. doi: 10.24059/olj.v19i4.561

[55] E. L. Deci and R. M. Ryan, "The 'what' and 'why' of goal pursuits: Human needs and the self-determination of behavior," *Psychological Inquiry,* vol. 11, no. 4, pp. 227–268, 2000. doi: 10.1207/S15327965PLI1104_01

[56] R. J. Stiggins, "Assessment literacy for the 21st century," *Phi Delta Kappan*, vol. 77, no. 3, pp. 238–245, 1995.

[57] L. W. Anderson and D. R. Krathwohl, *A Taxonomy for Learning, Teaching, and Assessing: A Revision of Bloom's Taxonomy of Educational Objectives*, New York, NY: Addison Wesley Longman, Inc., 2001.

[58] S. Messick, "Validity of psychological assessment: Validation of inferences from persons' responses and performances as scientific inquiry into score meaning," *American Psychologist*, vol. 50, no. 9, pp. 741–749, 1995. doi: 10.1037/0003-066X.50.9.741

[59] Technical Education and Skills Development Authority (TESDA). (2021). Training regulations for electrical installation and maintenance NC II. [Online]. Available: https://tesda.gov.ph/Downloadables/TR-Electrical%20Installation%20and%20Maintenance%20NC%20II.pdf

[60] J. P. Sampson Jr, G. W. Peterson, R. C. Reardon, and J. G. Lenz, "Using readiness assessment to improve career services: A cognitive information-processing approach," *The Career Development Quarterly*, vol. 49, no. 2, pp. 146–174, 2000. doi: 10.1002/j.2161-0045.2000.tb00556.x

[61] D. T. Conley, "Redefining college readiness," *Educational Policy Improvement Center (NJ1)*, 2007.
[62] M. Zeidner. (1998). Test anxiety: The state of the art. New York, NY: Plenum. [Online]. Available: https://link.springer.com/content/pdf/10.1007/0-306-47145-0_2.pdf

Copyright © 2026 by the authors. This is an open access article distributed under the Creative Commons Attribution License which permits unrestricted use, distribution, and reproduction in any medium, provided the original work is properly cited (CC BY 4.0).