The Role of Mobile Social Media in Enhancing University Students' Teaching-Learning Process

Abel-Enrique-Jesús Mujica-Paredes[1], Sandra Salazar-Palomino[1], Yersi-Luis Huamán-Romaní[2,*], Carlos-Alfredo Bocanegra-Garcia[3], Federico Kuaquira-Huallpa[2], and María-Inés Rivero-Aedo[4]

[1]Departamento Académico de Ciencias Básicas, Facultad de Ingeniería, Universidad Nacional Micaela Bastidas de Apurímac, Abancay, Peru
[2]Departamento Académico de Ciencias Básicas, Facultad de Ingeniería, Universidad Nacional Amazónica de Madre de Dios, Puerto Maldonado, Peru
[3]Departamento Académico de Pesquería, Facultad Ciencias Biológicas, Universidad Nacional de Trujillo, Trujillo, Peru
[4]Departamento Académico de Ingeniería Agropecuaria, Facultad de Agronomía y Zootecnia, Universidad Nacional de San Antonio Abad del Cusco, Cusco, Peru
Email: amujica@unamba.edu.pe (A.-E.-J.M.-P); sandrasalazarpa123@gmail.com (S.S.-P.); ylhromani@gmail.com (Y.-L.H.-R.); cbocanegra@unitru.edu.pe (C.-A.B.-G.); fkuaquira@unamad.edu.pe (F.K.-H.); maria.rivero@unsaac.edu.pe (M.-I.R.-A.)
*Corresponding author
Manuscript received January 9, 2025; revised January 20, 2025; accepted March 4, 2025; published May 21, 2025

***Abstract*—The main objective of this research is to determine the influence of social media on the teaching-learning process in university students and whether social networks enable knowledge sharing in their teaching-learning process. The methodology used is descriptive and quantitative, quantifiable information has been collected for analysis through an online questionnaire, whose population are university students in the province of Abancay, with a representative sample of 1009 students. The results are: the continued use of internet and social networks mainly by students, who use it to relate academically and socially with students from different parts of the world, the statistical part of the combinatorial factor analysis obtained values such as Cronbach's Alpha (0. 935) and McDonald's Omega (0.934), both higher than 0.7, which is the statistical value of the original instrument, while the exploratory factor analysis, for which a "Varimax" rotation was defined corrected the results of the factor analysis. Concluding that each factor significantly influences the teaching-learning process, as well as there is a causal relationship between student engagement and reputation in the dimensions of knowledge sharing and knowledge formation. Thus we can affirm that the most time spent accessing the internet is at home and followed by the university due to the free Wi-Fi.**

***Keywords*—social networks, teaching, learning, addiction to social networks, information and communication technology, university students**

I. Introduction

In these times considered as the digital era the internet is the essential source where you can find information and maintain a conversation group with topics of common interests [1], which is growing rapidly, because there are many people who use this medium with the sole purpose of searching and exchanging information [2]. The internet is complex and often changing but it has a great participation of users that nowadays due to its ease to extract information and perform online public opinion analysis that is very helpful to the interested population [3]. During the quarantine of Covid-19, the increase in the use of internet was very significant for the entire population and currently it is taken advantage of 100% [4, 5], this exponential growth in the use of internet is thanks to the pandemic and the modernization of digital skills, even in the digital security of many homes that are controlled with smartphones, in the same way Information and Communication Technologies (ICT) are being used in different environments and sectors [6]. On the other hand, also generated addiction to the internet, smartphones, social networks and many technology devices [7, 8], causing obesity and decreased physical activity in the population, preferably in older adults [9].

The integration of information and communication technologies was thanks to the internet, because of this the university classrooms have access to all digital environments, as well as work and daily centers were digitized [10] as part of the process, while in the education sector is involved with the teaching-learning that leads to improve the academic performance of university students and this allows to have good educational practices for a future of quality [11], this process through the internet to finding advantage in terms of cost and time to obtain information and communication more effectively on a daily basis and be more informed of the world in real time about any event [12], but on the other hand is the rapid technological development that has significantly increased the demand for devices connected to the internet and even more so in young university students [13], most of these devices exchange information through social networks [14], becoming an indispensable service for the human being during and after confinement because of Covid-19, which kept informed of the progress being made on the vaccine [15], so it is necessary to design a strategy to integrate educational technologies in teaching and learning at the higher level [16].

The main users of the technology revolution are students at different educational levels and adults who adapt more easily as they are more users every day [17], smartphones are one of the favorite technologies in terms of electronic devices for internet use [18], with the quarantine due to Covid-19 the use of these devices increased rapidly due to the monotony of the time spent at home [19]. This situation of the use of social networks has generated concern in the population due to the excessive use of the internet among university students [20], as these devices have cancelled out little or no outdoor physical activity, which has caused health and wellbeing complications among university students [21], but at the same time university students use smartphones to maintain an active social life [22] and in this way they have become a useful tool for social communication and in general as a

method of social organization in the daily life of all university students [23].

Social media intervenes through social networks to send interactive communications [24], knowing that many people around the world make use of these to be informed of what is happening in real time [25] and becoming a reliable source or not where you can find news, comments, rumors and others at local, national and international level, This information is offered in an easy way and is able to communicate between thousands of people in an instant [26], in this way a lot of information is disseminated to the world [27], thus becoming a regular means of attracting new dependent users who are in social networks and at the same time this true or false information generates influential users [28]. All information created and disseminated by users reflects in many cases the problems existing in the country or in the world [29] which could cause confusion in future generations, since all information is recorded and stored for future use [30].

The use of social networks brought with it several problems generating negative impacts of consideration among young people mainly referred to social interaction [31], as well as the neurocognitive influence on social adaptation due to the little interaction between young people and their social environment [32], affecting mental health due to the adverse effects of cyberbullying and existing challenges in the social network that in many cases make young people commit suicide or have anxiety problems [33]. Another problem encountered is the addiction to photographs, many times exaggeratedly improving their appearance and becoming a potential risk for kidnappings [34], about seven out of ten people in the world make use of social networks to interact with people from different parts of the world, so it is considered a relevant source to know the behavior of people [35], in addition to interacting with strangers and without the necessary information of their real identity, giving rise to many malicious behaviors [36].

One of the common problems brought by media such as social networks is misinformation in the university community and the general population [37], whose dissemination could generate inappropriate psychosocial or collective behaviors [38], so the interaction between people is the essence of some social problems that taken to the social network become global problems online [39]. Social networks such as Facebook, Twitter, WhatsApp and Instagram are the most explored media by university students in which a lot of false information is found that generates strong negative impacts on society [40], the information obtained in social networks are in textual or visual form thus becoming attractive to all types of users [41], which generates patterns where university students manage to have easy access to little or no credible discussion spaces [42], likewise this online interaction is generating strong impacts on the quality of sleep because many university students remain connected to the network until late at night [43].

II. Literature Review

The other problem generated by the internet and social networks are the countless subscriptions to different internet promotions for fixed and mobile telephony, making 5G social networks a reality in much of the world [44], being smartphones, tablet and laptops the favorite and indispensable devices among university students and at the same time generating concern among educators since the excessive use of these devices in classes distracts the university student [45], but not only distracts them but also exposes them to cybercriminals who in recent years have become the main cause of espionage and sabotage [46], cyberattacks and cyberespionage are increasing worldwide and it is necessary to educate university students in cybersecurity so that they know and become aware of the threats to which they are exposed in social networks [47].

With the use of the internet it has been seen that universities that teach virtual classes, teachers have much flexibility in terms of location and time, thus providing more alternatives for students to achieve their academic goals [48], in many cases virtual teaching in regular basic education and universities is here to stay, generating positive academic prospects for teachers and students [49], which is why the digital competencies of teachers must be integrated according to the new challenges presented by virtually to improve the expected learning and contribute to the formation of professionals [50]. The development of professional competencies leads to the application of technological resources that become indispensable with the passage of time [51], thus leading digital education thanks to virtual teaching, blended learning and the use of technologies, despite the fact that this type of digital education is not used to the same extent as in other countries [52].

The production of knowledge together with the innovative capacity of people became intangible capital [53], and this becomes necessary to extract useful knowledge in the network that is important in learning [54], also the transfer of knowledge is an alternative for the use of technologies used by university students [55], and with this we can refer to knowledge management as a strategic ally to improve more and more the adequate transfer of knowledge [56], universities are the institutions with the ability to support the development and dissemination of all useful and necessary technology in knowledge management [57], therefore the real scenario due to its constant updating and accelerated growth worldwide have created increasingly complex critical spaces [58], on the other hand it also becomes a challenge to evaluate its effectiveness in the field of university teaching [59].

Because we are used to improvise and learn constantly [60], scientific innovations in electronic devices are increasingly intelligent and open ways to a technological future that responds to current changes [61], finding increasingly simple interactions and with compatible functions and accessible to all, to combat the limitations found in the learning process is necessary to use the internet [62], imagining then that the future of technology that contributes the teaching-learning process will be with the interaction of the use of data science designed for the human being and its environment [63], and that due to the digitization of knowledge in the university system it is necessary to adapt the innovation of technologies in the teaching process [64], considering that it is an agent that has changed society as a whole and has developed faster and faster responding to the social needs of man [65].

Justification and Objectives of the Research:

It is for this reason that in the province of Abancay there are many internet booths for students who do not have megabytes or data in their applications, these internet booths are visited due to the low cost and speed of downloads and/or better facilities to communicate more quickly and actively. The use of technology is and will be a primary need in these times [66], but more control must be exercised on students, because a society dependent on these devices is being generated, education in the Covid-19 era did require a device with which the student could interact in the classroom, because in those times reverse learning dominated in some educational institutions such as universities [67]. In order to prevent the frequent misuse of these devices, it is proposed to investigate this problem, for which the general objective is: to determine the influence of social media in the teaching-learning process in university students and also having as specific objectives: to determine the social network most used by university students; to determine whether they use the social network to exchange knowledge in their teaching-learning process; to determine whether students consider that social networks contribute to their professional training; to analyze how committed students are to social media and to analyze whether the reputation in social networks contributes to their acquisition of knowledge.

III. Materials and Methods

A. Sample

For this descriptive research work, quantifiable information has been collected for analysis through an online questionnaire, considering as a population the university students of the province of Abancay who come from different provinces and districts to study at university level, which has a representative sample of 1009 students, of these students 58% are male and 42% are female. This is because the vast majority of women are shy when asked about their social networks and when the interviewer is male, the fear increases because they need to have a mobile phone number to be able to share the survey and the young women think that they only want to get their mobile phone number to ask them out, while men feel more comfortable when a young woman invites them to participate in a survey, which will be passed on via WhatsApp. Furthermore, 75.7% of these students come from a public university while 24.3% from a private university, university participants are between 16 and 20 years old represent 59%, participants between 21 and 25 years old represent 29.5%, participants between 26 and 30 years old represent 6.6% and those over 31 years old represent only 4.9%, who were conventionally and voluntarily chosen.

When answering the research questionnaire, the university students agreed to participate voluntarily, as each participant was informed that the survey was completely anonymous and that at the end of the survey, the answers would be used to publish them in a scientific article. The survey method was used because we have access to students through pro-course WhatsApp's groups and can be shared among colleagues in order to obtain a greater number of participants, in the interview we would have obtained the least number of participants because they do not have time to conduct the interview. We also took into account the participation of professional careers by area, where it was possible to group them into engineering, humanities, social sciences and, finally, health. The most representative students surveyed were those from the engineering area with 43.6%, followed by students from the humanities area with 29.7% and the rest of the professional careers with 26.7%.

B. Instrument

Once the research topic was chosen, twelve articles published in the Scopus database were selected, of which they contain instruments that measure and talk about the contribution of social networks in the teaching-learning process, only seven were downloaded because they were open access and five of them requested the respective payment. Once the seven articles were downloaded, they were translated by two specialists for analysis and testing. At the end of the translation of the seven articles, we proceeded to evaluate and analyze each measurement instrument of each of the articles in order to select three of them, since these instruments evaluated the role of social media, the interaction of university students through social networks and social media as a tool to improve learning: then we proceeded to conduct the respective tests with a sample of 36 students, where the first instrument (first article) contained 24 items, the second instrument (second article) contained 12 items and the third instrument (third article) contained 14 items, all these instruments coincided in the use of social networks to enhance learning. When performing the respective tests, the one that obtained the best results in all the tests was the third instrument. Thus, the instrument in the article by Sivakumar *et al*. [68] was chosen as the instrument and adapted to the Peruvian version. The research flowchart is represented as in Fig. 1.

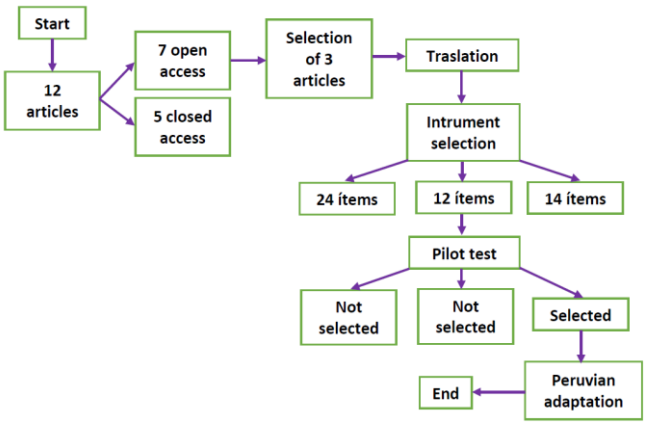

Fig. 1. Research flowchart.

This is how the research begins using the already validated instrument of Sivakumar *et al*. [68] which contains four dimensions and they are the following: Knowledge Exchange (CI), Knowledge Formation (FC), Student Commitment (CE) and Reputation (R), with these dimensions we want to analyze the influence of social networks in the teaching-learning process, because teachers at a higher level still continue to use virtual classes in a lower percentage and leave work to be done in groups or individually, For this reason, they take the opportunity to review or enter their social networks to carry out some academic activities.

The dimension of knowledge sharing is made up of: Item1: uses social networks to exchange documents and improve

academic learning; Item2: how often you use social media to share knowledge; Item3: you consider that social networks support you in your professional training. The second dimension of knowledge formation is made up of Item4: social media content facilitates knowledge formation; Item5: There is a collective contribution to the creation of new content on social media; Item 6: the development of study materials and the use of social media facilitates their knowledge formation; Item7: uses social media information to prepare your seminars, projects, presentations, etc.; Item 8: the teacher encourages students to use social networks to improve their academic performance. The third dimension of Student Engagement (CE) is made up of Item9: social media offers active interaction between student and teacher; Item10: the use of social media can increase their interest in learning through active participation; Item11: would you create interesting content/information on social media? And the fourth and last dimension is R and is made up of Item12: the exchange of knowledge should be rewarded with benefits such as reputation; Item13: by sharing ideas and knowledge you expect reward or recognition; Item14: your university's reputation will improve if you actively engage in social media. With this survey we will analyze and respond to our stated objectives.

C. Procedure and Data Analysis

In each dimension, the instrument measures the opinion of university students on knowledge exchange, knowledge formation, student commitment and student reputation, for this the five-point Likert scale has been used as follows: 1 = never, 2 = almost never, 3 = sometimes, 4 = almost always and 5 = always, the social network most used by young people was also consulted to carry out the respective analyses. Once our objectives had been set and pilot tests had been carried out with the selected instruments, the survey was developed in Google form, where we proceeded to inform about the study objective and that the survey was totally anonymous and voluntary, it was also configured so that university students can answer only once using a Gmail account with sociodemographic questions such as gender, age, semester of study, type of university, and the respective study questions about the influence of social media on the learning of their studies.

Once the survey was thoroughly reviewed with the researchers, it was shared among university students in the province of Abancay, always respecting privacy and not forcing any student to participate in this research, the survey was also shared among colleagues from different universities in all areas (state and private universities) so that they can share among their students for two months. Once the survey was completed, the data was downloaded from the Google form in excel format, then all the questions were reviewed to be reviewed and then converted into SPSS format (version 25), where the different statistical tests were carried out and adequate values were obtained to continue with the research.

Having obtained these statistical values such as Cronbach's Alpha (0.935) and Mc Donald's Omega (0.934), both higher than 0.7, which is the statistical value of the original instrument used by Sivakumar *et al*. [68], it is considered reliable and allows us to continue with the research. The results of the Exploratory Factor Analysis (EFA), for which a "Varimax" rotation was defined. The findings pinpoint two factors extractable from the model. Where the first factor explains 54.79% of the variance and the second factor explains 8.75%, i.e., the extraction of two factors explains 63.5% of the total variance. A Bartlett sphericity test was performed, obtaining an X2 = 8893.2, with gl = 91 and a significance level = 0.00, evidencing feasible correlation coefficients that deviate significantly from an equation that connects the conceptual model with the final two-factor solution. Likewise, the results of the Kaiser-Meyer-Olkin Measure of Sampling Adequacy (KMO MSA), which yields a value of 0.943, determine that the sample size is sufficient for the study. The results of the confirmatory factor analysis are also evidenced, for which a "Varimax" rotation was defined, similar to the EFA.

The findings confirm that four factors can be extracted from the model. Where the first factor explains 54.79% of the variance and the second factor explains 8.75%, the third factor explains 5.4%, and the fourth factor explains 4.9% of the variance, i.e., the extraction of the four factors explains 73.9% of the total variance. He confirmed that the items that correspond to each dimension would be highly correlated with each other and strongly influence that component. CP1 = Knowledge Training, CP2 = Knowledge Exchange, CP3 = Reputation and CP4 = Student Commitment. Bartlett's sphericity test, obtaining an X2 = 8893.2, with gl = 91 and a significance level = 0.00. Evidencing and confirming feasible correlation coefficients that deviate significantly from an equation that connects the conceptual model to the final four-factor solution. Likewise, the results of the KMO MSA, which yields a value of 0.943, determine that the sample size is sufficient for the study. Composite Reliability (CR) and Average Variance Extracted (AVE) estimates. All CR and AVE of the four factors have values higher than 0.7, with factor four indicating the Student Engagement factor being the factor that evidences the highest level of AVE and the knowledge exchange factor is the one that evidences the highest level of CR.

IV. Result and Discussion

A. Result

Table 1 analyzes the social networks used by university students in the province of Abancay to communicate, where 92.2% use WhatsApp, 45.6% Messenger, 43.8% Facebook, 31.7% Instagram, 30.1% TikTok, 27.4% YouTube, 21.5% Telegram and 3.5% LinkedIn. As can be seen in the results, not only do they use one social network, but they use several and all with the same purpose of exchanging academic information and taking advantage of their leisure time to interact and have an active social life.

Table 2 shows data on the mean, variance, skewness and kurtosis for each item. In the responses of each dimension, the option "sometimes" is obtained in a large percentage, because it is related to the responses of the Likert-type scale. Likewise, within the knowledge exchange dimension, Item 3 is the one that obtained the highest mean, where it is considered that social networks support them in their professional training, this because there are many pages on social networks issuing information on how to become a good

professional and this motivates the student to be able to improve and be a good professional.

Table 1. Social media used to communicate

Data	Characteristics	N	Percentage (%)
What social media do you use to communicate?	Engineering	440	43.6
	YouTube	276	27.4
	WhatsApp	930	92.2
	Facebook	442	43.8
	Messenger	460	45.6
	Instagram	320	31.7
	Tiktok	304	30.1
	LinkedIn	35	3.5
	Telegram	217	21.5

Table 2. Distribution of dimension dispersion values

Items	Dimension	Media	Deviation	Asymmetry	Kurtosis
Item 1		3.40	1.109	−0.263	−0.583
Item 2	3.403	3.28	1.063	−0.169	−0.549
Item 3		3.54	1.066	−0.348	−0.504
Item 4		3.36	0.998	−0.236	−0.341
Item 5		3.26	1.018	−0.165	−0.472
Item 6	3.346	3.45	1.005	−0.291	−0.431
Item 7		3.42	1.054	−0.240	−0.561
Item 8		3.24	1.098	−0.116	−0.679
Item 9		3.23	1.116	−0.156	−0.699
Item 10	3.276	3.37	1.101	−0.305	−0.684
Item 11		3.23	1.188	−0.128	−0.877
Item 12		3.32	1.058	−0.213	−0.474
Item 13	3.253	3.01	1.114	−0.025	−0.658
Item 14		3.43	1.067	−0.259	−0.605

While in the dimension of knowledge formation, Item 6 is the one that obtained the highest mean, where the elaboration of study materials and their use in social networks facilitates their knowledge formation, due to the fact that there are groups of students who share their work according to their professional careers where ready-made work is included so that they can only adapt it and present it as an unpublished work. In the same way the dimension of student engagement, Item 10 is the one that obtained the highest mean, where the use of social media can increase their interest in learning through active participation, because once the work is submitted they can share it on social media and in return they will receive many "Likes" which means that they will have many followers for their work.

And finally the reputation dimension, Item 14 is the one that obtained the highest mean, where the reputation of your university will improve if you actively participate in social media, this means that after sharing the information (academic work) the "followers" will wonder which university you are from, so the reputation of your university to which you belong will grow among students.

Table 3. Distribution of the knowledge exchange dimension

Categories	Item 1	Item 2	Item 3
Never	56	53	37
Almost never	145	177	127
Sometimes	336	351	312
Almost always	286	295	324
Always	186	133	209

Table 3 shows the results of the knowledge sharing dimension, in this part it is observed that in the three items that make up the first dimension, the perspective with the highest score is the option "Sometimes" (Items 1 and 2), followed by the option "Almost always" (Item 3), and the lowest score is the response of the option "Never" for the entire analysis.

Fig. 2 shows the responses to the 3 items of the knowledge exchange dimension.

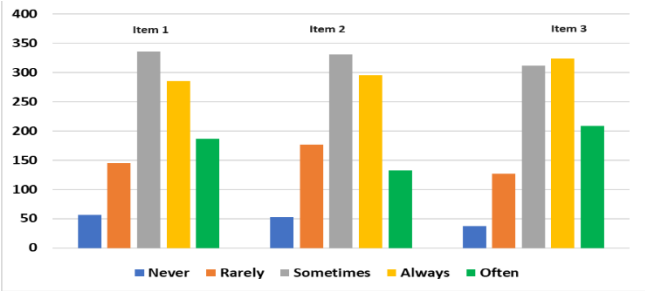

Fig. 2. Distribution of the knowledge exchange dimension.

Table 4 shows the results of the knowledge formation dimension, where it is observed that in the five items that make up the second dimension, the perspective with the highest score is the option "Sometimes" (Items 4, 5, 7 and 8), followed by the option "Almost always" (Item 6), and the lowest score is the option "Never" for the entire analysis.

Table 4. Distribution of knowledge training dimension

Categories	Item 4	Item 5	Item 6	Item 7	Item 8
Never	38	45	30	38	59
Almost never	145	181	143	155	199
Sometimes	368	362	326	329	334
Almost always	331	311	359	319	277
Always	127	110	151	168	140

Fig. 3 shows the responses to the 5 items of the Knowledge Training dimension.

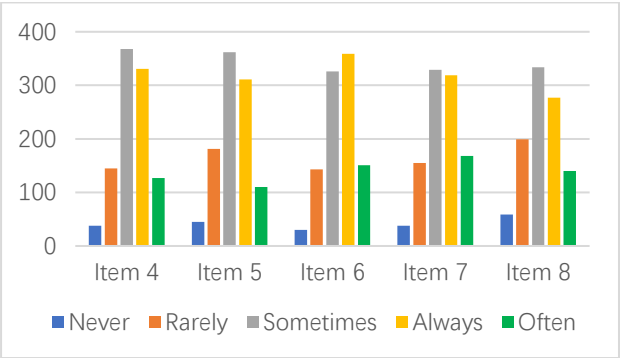

Fig. 3. Distribution of the knowledge training dimension.

Table 5 shows the results of the students' engagement dimension, where the three items that make up the third dimension are observed, the perspective with the highest score is the "Sometimes" option (Items 9 and 11), followed by the "Almost always" option (Item 10), and the lowest score is the "Never" option for the entire analysis.

Table 5. Distribution of the student engagement dimension

Categories	Item 9	Item 10	Item 11
Never	68	51	81
Almost never	196	184	207
Sometimes	321	269	292
Almost always	285	349	257
Always	139	156	172

Likewise, Fig. 4 shows the different responses to the items that make up the student engagement dimension.

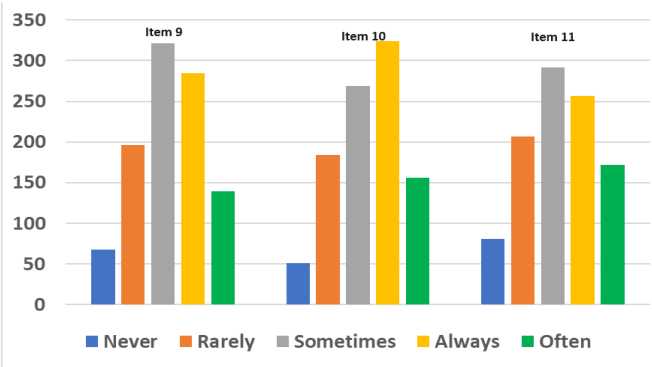

Fig. 4. Distribution of the student engagement dimension.

Table 6 shows the results of the reputation dimension, where the three items that make up the third dimension are observed and the perspective with the highest score is the option "Sometimes" (Items 12 and 13), followed by the option "Almost always" (Item 14), and the lowest score is the option "Never" for the entire analysis.

Table 6. Distribution of the reputation dimension

Categories	Item 12	Item 13	Item 14
Never	52	99	39
Almost never	156	223	161
Sometimes	360	352	312
Almost always	299	236	325
Always	142	99	172

Fig. 5 also shows the different responses to the items that make up the reputation dimension.

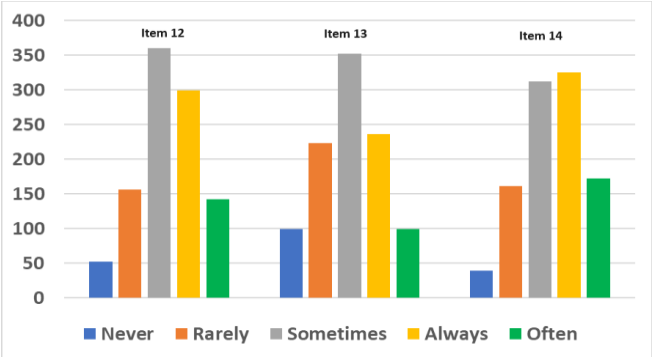

Fig. 5. Distribution of the Reputation dimension.

While Fig. 6 shows the results of the simultaneous dependence correlations between the four dimensions of the model. It was determined that there is a causal relationship between student engagement and reputation in the knowledge sharing and knowledge formation dimensions. Student engagement is the dimension that most influences student knowledge sharing and knowledge formation, obtaining coefficients of 0.75 and 0.81 respectively. Reputation is the dimension that least influences knowledge sharing and knowledge formation of students, obtaining coefficients of 0.19 and 0.20 respectively.

Table 7 also shows the goodness-of-fit of the structural equation model. The Mean Square Error Estimate (RMSEA) was 0.107, the Comparative Fit Index (CFI) was 0.906, the Tucker-Lewis Index (TLI) was 0.882, the Bentler-Bonett Non-Normalized Fit Index (NNFI) was 0.898, the Normalized Parsimony Adjustment Index (PNFI) was 0.721, the Bollen Relative Fit Index (RFI) was 0.873, and the Bollen Incremental Fit Index (IFI) was 0.906, demonstrating that the model fits the data of the suggested model.

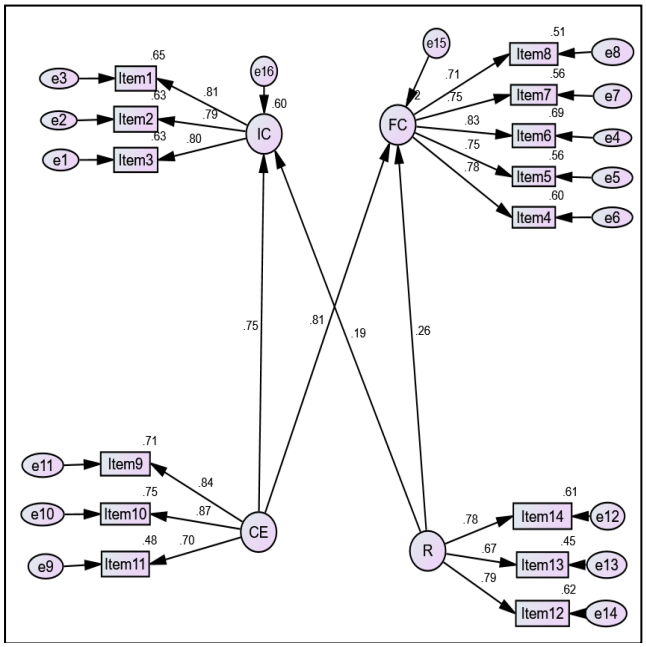

Fig. 6. Simultaneous dependency correlations between the four dimensions.

Table 7. Goodness-of-fit indices

Indexes	Model	Fit Index
Mean Square Error Approximation (RMSEA)	0.107 (p = 0.00)	p <0.05
Chi-Square (x2)	908.499 (p = 0.00)	p <0.05
Relative Chi-Square (X2/df)	3.86	3:1
Comparative Fit Index (CFI)	0.906	Values greater than 0.95
Tucker-Lewis Index (TLI)	0.882	Values greater than 0.80
Bentler-Bonett Normalized Fit Index (NNFI)	0.898	NNFI equal to or greater than 0.80
Normalized Parsimony Adjustment Index (PNFI)	0.721	Values >0.50
Bollen Relative Fit Index (RFI)	0.873	Values close to 1
Bollen's Incremental Fit Index (IFI)	0.906	Values greater than 0.90

B. *Discussion*

The moderate use of internet within the family improves the academic performance of its members, this allows the decrease of academic and generational inequalities of those who previously could not have internet [1], but this must be controlled, since in the internet there is a lot of false information and/or academic content of very low quality [3], so strategies should be developed to avoid these types of pages and be blocked [4], for example in cases of health, there are many people who are diagnosed with pathological diseases due to excessive stay on the internet, which have caused psychological damage to the entire family environment especially with some online video games [5]. With the use of technologies well used, solutions can be given to many sectors, such as education [6], but the internet in its misuse is generating virtual addiction and not only in students, but also in adults and even more in children [9], this integration of technologies has generated autonomy in many students and this influences the learning process either for better or for worse [10], because there is already a difference between the thinking of rural and urban university students, this was clearly demonstrated in the research, because rural university students are already part of the student leadership.

ICT provide valuable information for effective teaching and good teacher-student interaction [11], this is because in

the times of pandemic revalued the strengths and weaknesses of their adaptation to the university system [12], which created initiatives to include new technologies in their professional training and lead to academic success to each university student [14]. ICTs contribute greatly to digital skills and dimensions for students and teachers to be in a digitized world [16], but some adolescents and young people are often vulnerable to cyberbullying, often presenting depressive symptoms [17] and severely affecting academic performance. Currently, young university students are those who use smartphones the most and have the highest educational levels [18], but to reduce addiction to smartphones in special cases, rigorous education should be applied, as this method has been shown to reduce students' addiction to these devices [19], as well as blocking access to some web pages and this is applied in universities or study centers where Wi-Fi is free.

More than 50% of young people consider themselves addicted to their smartphones, so healthy habits in the use of these devices should be adopted, such as limiting the use of social networks and other non-academic uses to raise awareness of mental health problems [20], as well as experiencing outdoor activities with young university students in places where there is no phone signal and they cannot use their mobile devices [21]. Nowadays, young people use smartphones more than laptops or desktops due to the availability and ease of access to social networks [22], so more efforts should be made with young people to take advantage of the use of smartphones and take advantage of their potential in higher education [23] with trainings on the negative effect of using social networks, as social networks are being used maliciously to spread false information and at other times to commit some acts that go against people [26].

There is a lot of information that is shared generically or within a closed group of friends without any supervision or without measuring the consequences of the information [27], it is for this reason that users of social networks should be reviewed in detail and / or exhaustively the type of behavior that have these information [28], as many users of social networks often create unnecessary and false content to be spread left and right [29]. It is therefore essential to support young people in the proper use of social networks, since this would have a negative impact on certain cognitive functions in adolescents causing an apparent loneliness and poor academic performance [31], this negative impact also causes in university students a neurocognitive stress causing loneliness and poor adaptation to society [32] despite having social networks in which they only expect to have a good expectation of their publications.

Academic research recommends that parents get involved in what their children explore on the internet, as well as working together with educators and mental health personnel to preserve their mental health, prevent suicide and avoid mental problems that are attacking college students [33] after failing to achieve good prospects on social networks or not meeting challenges that damage physical health. These events are occurring because social networks negatively affect self-perception, self-esteem and addiction to filters in cameras that are the order of the day because in social networks are already incorporated [34] even programs for quick access, so it is recommended to use artificial intelligence to detect the behaviors of people in social networks and thus make decisions before something fatal happens [35], it is for that reason that the universities have blocked some websites. It is also necessary to control disinformation through social networks with strategies not only for local people but also at the international level, because once the information is published, it spreads uncontrollably reaching and speculating to all countries without the veracity of the case [37] and even affecting the emotional stability of people. Thus, thanks to the training provided by the universities themselves, it is sometimes possible to prevent any type of adverse situations, but nevertheless it is necessary to work more with young people from secondary education.

Students with fewer economic resources work and study at the same time study and are the ones who opt more frequently for virtual teaching so they have to be aware of the tasks and academic work groups [48], because students always seek to be prepared to respond to any question from the course teacher. The use of these social networks in university students greatly improved academic performance in virtual teaching compared to traditional teaching, but it requires better processes and capabilities in this field to bring traditional teaching to its peak [49], the digital competencies provided by teachers in e-learning include research and this greatly helps the university student to have more experience to build their own professional competencies [50], because thanks to collaborative work university students are formed as leaders to manage work teams and improvements in e-learning strategies are achieved thanks to the professional competencies of university students upon graduation [51] and demonstrate that all institutions have a common interest in applying the technologies learned to streamline management in the field of knowledge [53]. And to achieve all this there must be constant communication between institutions such as municipalities and universities so that knowledge management is not only reflected in university classrooms, but also in the population [57] and evaluate the transfer of knowledge that is done to validate the quality of the information obtained as an indispensable tool in the professional training of a university student [59], because thanks to social networks and their followers groups of university students are seen as a source of knowledge internationally and are invited to be speakers at academic events or also become influencers at the level of social networks.

In recent years it has been considered as the digital era due to the enormous accelerated growth of the use of information technologies together with the use of the internet, with these modern technologies you have easy access to social networks. The use of well used technologies can be a solution for self-learning of the future and the present [6], being so that the social networks most used by university students to communicate are: 92.2% use WhatsApp, 45.6% use Messenger, 43. 8% use Facebook, with these considerations a greater effort should be made to take more advantage of the use of smartphones and take advantage of their potential in university higher education [23], since many users of social networks create unnecessary and false content that are disclosed through the different platforms that do not contain academic cases [29], then it is essential to help young people

with the proper use of social networks to not generate negative impact to certain cognitive functions leading them to an apparent loneliness and this directly affects their academic performance [31].

There are many opinions on platforms such as blogs that highlight machine learning and the challenges that researchers may face due to the importance of social networks [69], but there are still groups of university students in their own universities that have ongoing training to prevent any type of digital threat.

In the knowledge sharing dimension, students consider that social networks support their professional training, providing them with valuable information for effective teaching, as well as a good methodology for interaction between teachers and students [11], in addition to generating certain autonomy for the student to influence the autonomous learning process [10]. In the dimension of knowledge formation, social media contents are valued, since they facilitate their knowledge formation, there being a collective contribution for the creation of new academic contents in social media; that they use the information from social media to prepare their seminars, projects, presentations, etc. and it is suggested that teachers promote the use of social networks among them, taking into account that young people are the ones who use these media the most and have the highest educational levels in digital skills [18], but, always taking care that the information to be shared is generic or within a closed group of friends, since there is no supervision over what is disseminated and to whom this information can reach [27]. There is no detailed and exhaustive review of online users and their behavior as such [28], so these effects are a product of online classes, which nowadays students are asking to use, and even agree with hybrid teaching [70], with the sole purpose of improving their academic level and generating more social relationships at the academic level.

Regarding the dimension of student engagement, social media offer an active interaction between students and teachers and the use increases their interest in learning through active participation; and universities should create initiatives to include new technologies in their professional training and guide them to academic success [14], digital data should be used in decision making to better understand people's behavior [35], parents should be involved in what their children explore on the internet in such a way collaborates with universities and supports health personnel to preserve their mental health, prevent suicide and mental health problems [33]. Regarding the reputational dimension, students consider that knowledge sharing should be rewarded with some benefits, since by sharing ideas and knowledge they expect a reward or recognition, but the transfer of knowledge that is necessary to validate the quality of the information obtained should be evaluated, since it is considered as an indispensable tool in the student's professional training [59]. Social networks are also used to create malicious content in a malicious way and spread bad rumors as there are also fake news [26] and this greatly harms the population and the personality of the affected person. It is clear that the research focuses on students, but no one has asked what happens with adults, because if we see in the same social networks there is a lot of information about people distracted by excessive use of cell phones, then it should be investigated what is the emotional state of these adults by the frequent use of these technological devices, as well as whether it could be considered an addiction to social networks, but in adults.

Due to the results presented and considering that social networks are an integral part of young people's daily lives, because the benefits of technology and social networks are undeniable. They also improved communication, facilitating new ways of learning, access to information and knowledge. On the other hand, social networks proved to break physical barriers allowing contact with anyone in the world in real time, a situation that opens professional possibilities and one of the platforms that is handled in the world is: LinkedIn, allowing you to create a professional profile that introduces you to professionals from different segments worldwide, another platform that helps young professionals to find employment is: Networking, which is a powerful tool that seeks employment and allows professional advancement.

But young people can also use social networks to showcase their talents and skills that allow them to find unique possibilities in their professional training or in some activity that they are passionate about.

V. Conclusion

The combinatorial factor analysis corrects the results and specifies that the final solution of the four factors corresponds to the construct of the instrument. Likewise, it is concluded that each factor significantly influences the teaching-learning process in university students in the province of Abancay.

But it has been observed that the continuous use of the internet and social networks, mainly by young people, who use them to interact socially with their peers in different parts of the world, creates a space for the exchange of ideas and opinions, allowing them to learn about different customs and cultures without having to be physically in a specific place, all thanks to the easy access to these networks. But they are also easy to any spam or scams by social networks, so the university campaigns to prevent these types of deceptions and trains on an annual basis.

Universities cannot be oblivious to the accelerated growth of information technologies and with it the social networks to which students have easy access and in many cases are quite attractive as institutions of higher education committed to the formation of human beings and provide a quality education, and from the university promotes respect for the academic community to not disseminate, issue news or false communications or affect the integrity of any member.

It is necessary to get involved in the activities of young people together with parents to guide the distracters in their teaching-learning process and thus improve the usefulness of these open spaces.

It was determined that there is a causal relationship between student engagement and reputation in the dimensions of knowledge sharing and knowledge formation.

Student engagement is the dimension that most influences student knowledge sharing and knowledge formation. And reputation is the dimension that least influences the exchange and formation of knowledge of students, this is due to the little importance given to academic publications by the most talented people, since the reputation of a university is only observed when someone has excelled in sports, academics,

competitions and others of pure academic interest.

CONFLICT OF INTEREST

The authors declare no conflict of interest.

AUTHOR CONTRIBUTIONS

AEJMP, SSP, YLHR, CABG, FKH, MIRA: conception and design of the study; AEJMP, SSP, data collection; YLHR, CABG, FKH, MIRA analysis and interpretation of the results; AEJMP, SSP, YLHR, CABG, FKH, MIRA preparation of the draft; all authors had approved the final version.

FUNDING

This research was supported by the Micaela Bastidas National University of Abancay.

REFERENCES

[1] G. Zhou and K. Guo, "The impact of guardian's usage of the internet on children's cognitive skills," *International Studies of Economics*, vol. 18, no. 2, pp. 193–210, 2023. doi: https://doi.org/10.1002/ise3.34

[2] H. W. Sheo, J. W. Ha, J. H. Kwak, M. O. Kim, H. Byun, S. H. Lee, and J. H. Chung, "A content analysis of YouTube videos on tinnitus in South Korea," *Scientific Reports*, vol. 13, no. 1, p. 13579. 2023. doi: https://doi.org/10.1038/S41598-023-40523-9

[3] Z. Liu and X. Wu, "Structural analysis of the evolution mechanism of online public opinion and its development stages based on machine learning and social network analysis," *International Journal of Computational Intelligence Systems*, vol. 16, no. 1, 2023. doi: https://doi.org/10.1007/S44196-023-00277-8

[4] Y. Gao, F. Liu, and L. Gao, "Echo chamber effects on short video platforms," *Scientific Reports*, vol. 13, no. 1, p. 6282, 2023. doi: https://doi.org/10.1038/S41598-023-33370-1

[5] D. Ayyıldız and F. Gümüştaş, "Pathological internet use levels and psychiatric diagnoses in adolescents admitted to a child psychiatry outpatient clinic after face-to-face education restriction due to the pandemic," *Guncel Pediatri*, vol. 21, no. 1, pp. 84–91, 2023. doi: https://doi.org/10.4274/jcp.2023.05945

[6] Ö. Aslan, S. S. Aktuğ, M. Ozkan-Okay, A. A. Yilmaz, and E. Akin, "A comprehensive review of cyber security vulnerabilities, threats, attacks, and solutions," *Electronics (Switzerland*), vol. 12, no. 6, p. 1333, 2023. doi: https://doi.org/10.3390/electronics12061333

[7] T. Karakose, T. Tülübaş, and S. Papadakis, "Revealing the intellectual structure and evolution of digital addiction research: An integrated bibliometric and science mapping approach," *International Journal of Environmental Research and Public Health*, vol. 19, no. 22, p. 14883, 2022. doi: https://doi.org/10.3390/ijerph192214883

[8] T. Tülübaş, T. Karakose, and S. Papadakis, "A holistic investigation of the relationship between digital addiction and academic achievement among students," *European Journal of Investigation in Health, Psychology and Education*, vol. 13, no. 10, pp. 2006–2034, 2023. doi: https://doi.org/10.3390/ejihpe13100143

[9] S. B. Koca, A. Paketçi, and G. Büyükyılmaz, "The relationship between internet usage style and internet addiction and food addiction in obese children compared to healthy children," *Turkish Archives of Pediatrics*, vol. 58, no. 2, pp. 205–211, 2023. doi: https://doi.org/10.5152/TurkArchPediatr.2023.22183

[10] L. A. Ávila-Meléndez, "Meaningful ICT integration into deprived rural communities' multigrade classrooms," *Research and Practice in Technology Enhanced Learning*, vol. 19, art. no. 5, 2024. doi: https://doi.org/10.58459/rptel.2024.19005

[11] R. Peng, R. A. Razak, and S. H. Halili, "Investigating the factors affecting ICT integration of in-service teachers in Henan province, China: Structural equation modeling," *Humanities and Social Sciences Communications*, vol. 10, no. 1, pp. 1–11, 2023. doi: https://doi.org/10.1057/s41599-023-01871-z

[12] D. N. B. Pak, O. S. Kırtıloğlu, M. Kayalık, and Z. A. Polat, "The transformation from e-government to e-land administration in Türkiye: A SWOT-based assessment analysis," *International Journal of Engineering and Geosciences*, vol. 8, no. 3, pp. 290–300, 2023. doi: https://doi.org/10.26833/ijeg.1152715

[13] A. H. H. Kabla, M. Anbar, S. Hamouda, A. A. Bahashwan, T. A. Al-Amiedy, I. H. Hasbullah, and S. Faisal "Machine and deep learning techniques for detecting internet protocol version six attacks: A review," *International Journal of Electrical and Computer Engineering*, vol. 13, no. 5, pp. 5617–5631, 2023. doi: https://doi.org/10.11591/ijece.v13i5.pp5617-5631

[14] A. Aljuhani, P. Kumar, R. Kumar, A. Jolfaei, and A. K. M. N. Islam, "Fog intelligence for secure smart villages: Architecture and future challenges," *IEEE Consumer Electronics Magazine*, vol. 12, no. 5, pp. 12–21, 2023. doi: https://doi.org/10.1109/MCE.2022.3193268

[15] R. S. Weerarathna, N. M. Rathnayake, U. P. G. Y. Pathirana, D. S. H. Weerasinghe, D. S. P. Biyanwila, S. D. Bogahage, and M. P. S Thiwanka, "Effect of e-learning on management undergraduates' academic success during COVID-19: A study at non-state universities in Sri Lanka," *Heliyon*, vol. 9, no. 9, p. e19293, 2023. doi: https://doi.org/10.1016/J.HELIYON.2023.e19293

[16] C. Kadıoğlu-Akbulut, B. Acar-Şeşen, and S. Küçük, "Predicting preservice science teachers' TPACK through ICT usage," *Education and Information Technologies*, vol. 28, no. 9, pp. 11269–11289, 2023. doi: https://doi.org/10.1007/s10639-023-11657-0

[17] C. Maurya, T. Muhammad, A. Das, A. Fathah, and P. Dhillon, "The role of self-efficacy and parental communication in the association between cyber victimization and depression among adolescents and young adults: A structural equation model," *BMC Psychiatry*, vol. 23, no. 1, p. 337, 2023. doi: https://doi.org/10.1186/s12888-023-04841-6

[18] A. Wenz and F. Keusch, "The second-level smartphone divide: A typology of smartphone use based on frequency of use, skills, and types of activities," *Mobile Media and Communication*, vol. 11, no. 3, pp. 459–483, 2023. doi: https://doi.org/10.1177/20501579221140761

[19] D. Avci, N. A. Gündoğdu, R. H. Dönmez, and F. E. Avci, "Students as teachers: Effect of the peer education model on reducing smartphone addiction in adolescents," *Health Education Research*, vol. 38, no. 2, pp. 107–118, 2023. doi: https://doi.org/10.1093/her/kyad042

[20] D. Chinwong, P. Sukwuttichai, N. Jaiwong, C. Saenjum, N. Klinjun, and S. Chinwong, "Smartphone use and addiction among pharmacy students in northern Thailand: A cross-sectional study," *Healthcare (Switzerland)*, vol. 11, no. 9, art. no. 1264, 2023. doi: https://doi.org/10.3390/healthcare11091264

[21] A. L. Morse and S. B. Emery, "Avoiding the 'easy route': Young people's socio-spatial experience of the outdoors in the absence of digital technology," *Geoforum*, vol. 141, p. 103727, 2023. doi: https://doi.org/10.1016/j.geoforum.2023.103727

[22] H. Salim, P. G. Waterworth, A. Daud, Dahnilsyah, and M. Hanif, "The integration of digital technologies into practicum classrooms by smartphone-savvy pre-service teachers in Indonesia," *European Journal of Educational Research*, vol. 12, no. 2, pp. 593–603, 2023. doi: https://doi.org/10.12973/eu-jer.12.2.593

[23] V. Lang and A. Šorgo, "Recognition of the perceived benefits of smartphones and tablets and their influence on the quality of learning outcomes by students in lower secondary biology classes," *Applied Sciences (Switzerland)*, vol. 13, no. 6, p. 3379, 2023. doi: https://doi.org/10.3390/app13063379

[24] E. Bokányi, E. M. Heemskerk, and F. W. Takes, "The anatomy of a population-scale social network," *Scientific Reports*, vol. 13, no. 1, p. 9209, 2023. doi: https://doi.org/10.1038/s41598-023-36324-9

[25] D. Frąszczak, "Detecting rumor outbreaks in online social networks," *Social Network Analysis and Mining*, vol. 13, no. 1, p. 91, 2023. doi: https://doi.org/10.1007/s13278-023-01092-x

[26] E. Aïmeur, S. Amri, and G. Brassard, "Fake news, disinformation and misinformation in social media: A review," *Social Network Analysis and Mining*, vol. 13, no. 1, p. 30, 2023. doi: https://doi.org/10.1007/s13278-023-01028-5

[27] J. M. Larson and P. L. Rodriguez, "The risk of aggregating networks when diffusion is tie-specific," *Applied Network Science*, vol. 8, no. 1, p. 21, 2023. doi: https://doi.org/10.1007/s41109-023-00546-7

[28] A. Zareie and R. Sakellariou, "Influence maximization in social networks: A survey of behaviour-aware methods," *Social Network Analysis and Mining*, vol. 13, no. 1, p. 78, 2023. doi: https://doi.org/10.1007/s13278-023-01078-9

[29] A. Chakraborty and N. Mukherjee, "Analysis and mining of an election-based network using large-scale twitter data: A retrospective study," *Social Network Analysis and Mining*, vol. 13, no. 1, p. 74, 2023. doi: https://doi.org/10.1007/s13278-023-01081-0

[30] A. P. Logan, P. M. LaCasse, and B. J. Lunday, "Social network analysis of Twitter interactions: a directed multilayer network approach," *Social Network Analysis and M*ining, vol. 13, no. 1, p. 65, 2023. doi: https://doi.org/10.1007/s13278-023-01063-2

[31] R. Tarabay, S. Gerges, A. S. El Dine, D. Malaeb, S. Obeid, S. Hallit, and M. Soufia, "Exploring the indirect effect of loneliness in the association between problematic use of social networks and cognitive function in Lebanese adolescents," *BMC Psychology*, vol. 11, no. 1, p. 152, 2023. doi: https://doi.org/10.1186/s40359-023-01168-5

[32] D. Franco-O'Byrne, J. P. M. Sepúlveda, R. Gonzalez-Gomez, A. Ibáñez, D. Huepe-Artigas, C. Matus, R. Manen, J. Ayala, S. Fittipaldi, and D. Huepe, "The neurocognitive impact of loneliness and social networks on social adaptation," *Scientific Reports*, vol. 13, no. 1, p. 12048, 2023. doi: https://doi.org/10.1038/s41598-023-38244-0

[33] E. Balt, S. Mérelle, J. Robinson, A. Popma, D. Creemers, I. van den Brand, D. van Bergen, S. Rasing, W. Mulder, and R. Gilissen, "Social media use of adolescents who died by suicide: lessons from a psychological autopsy study," *Child and Adolescent Psychiatry and Mental Health*, vol. 17, no. 1, p. 48, 2023. doi: https://doi.org/10.1186/s13034-023-00597-9

[34] P. Ozimek, S. Lainas, H.-W. Bierhoff, and E. Rohmann, "How photo editing in social media shapes self-perceived attractiveness and self-esteem via self-objectification and physical appearance comparisons," *BMC Psychology*, vol. 11, no. 1, 2023. doi: https://doi.org/10.1186/s40359-023-01143-0

[35] N. Pokhriyal, B. A. Valentino, and S. Vosoughi, "Quantifying participation biases on social media," *EPJ Data Science*, vol. 12, no. 1, art. no. 26, 2023. doi: https://doi.org/10.1140/epjds/s13688-023-00405-6

[36] A. Dehghan, K.Siuta, A. Skorupka, A. Dubey, A. Betlen, D. Miller, W. Xu, B. Kamiński, and P. Prałat, "Detecting bots in social-networks using node and structural embeddings," *Journal of Big Data*, vol. 10, no. 1, p. 119, 2023. doi: https://doi.org/10.1186/s40537-023-00796-3

[37] A. G. Rincón, S. B. Moreno, B. Rodríguez-Canovas, R. L. C. Barbosa, and D. R. A. Franco, "Social networks, disinformation and diplomacy: a dynamic model for a current problem," *Humanities and Social Sciences Communications*, vol. 10, no. 1, p. 505, 2023. doi: https://doi.org/10.1057/s41599-023-01998-z

[38] I. Dallo, O. Elroy, L. Fallou, N. Komendantova, and A. Yosipof, "Dynamics and characteristics of misinformation related to earthquake predictions on Twitter," *Scientific Reports*, vol. 13, no. 1, p. 13391, 2023. doi: https://doi.org/10.1038/s41598-023-40399-9

[39] S. Chowdhary, E. Andres, A. Manna, L. Blagojević, L. Di Gaetano, and G. Iñiguez, "Temporal patterns of reciprocity in communication networks," *EPJ Data Science*, vol. 12, no. 1, 2023. doi: https://doi.org/10.1140/epjds/s13688-023-00382-w

[40] I. Fadhli, L. Hlaoua, and M. N. Omri, "Deep learning-based credibility conversation detection approaches from social network," *Social Network Analysis and Mining*, vol. 13, no. 1, 2023. doi: https://doi.org/10.1007/s13278-023-01066-z

[41] F. Ghorbanpour, M. Ramezani, M. A. Fazli, and H. R. Rabiee, "FNR: a similarity and transformer-based approach to detect multi-modal fake news in social media," *Social Network Analysis and Mining*, vol. 13, no. 1, 2023. doi: https://doi.org/10.1007/s13278-023-01065-0

[42] J. Lim, "Exploring the relationships between interaction measures and learning outcomes through social network analysis: the mediating role of social presence," *International Journal of Educational Technology in Higher Education*, vol. 20, no. 1, 2023. doi: https://doi.org/10.1186/s41239-023-00384-8

[43] A. R. Gaya, R. Brum, K. Brites, A. Gaya, L. de Borba Schneiders, M. A. D. Junior, and J. F. López-Gil, "Electronic device and social network use and sleep outcomes among adolescents: the EHDLA study," *BMC Public Health*, vol. 23, no. 1, 2023. doi: https://doi.org/10.1186/s12889-023-15579-x

[44] A. Moubayed, D. M. Manias, A. Javadtalab, M. Hemmati, Y. You, and A. Shami, "OTN-over-WDM optimization in 5G networks: key challenges and innovation opportunities," *Photonic Network Communications*, vol. 45, no. 2, pp. 49–66, 2023. doi: https://doi.org/10.1007/s11107-022-00991-x

[45] S. M. Krishna and S. Agrawal, "Cyberloafing: Exploring the role of psychological wellbeing and social media learning," *Behavioral Sciences*, vol. 13, no. 8, 2023. doi: https://doi.org/10.3390/bs13080649

[46] Z. Muhammad, Z. Anwar, A. R. Javed, B. Saleem, S. Abbas, and T. R. Gadekallu, "Smartphone security and privacy: A survey on APTs, sensor-based attacks, side-channel attacks, google play attacks, and defenses," *Technologies*, vol. 11, no. 3, 2023. doi: https://doi.org/10.3390/technologies11030076

[47] C. Scherb, L. Bryan, F. Grimberg, H. Grieder, and M. Maurer, "A cyberattack simulation for teaching cybersecurity," *EPiC Series in Computing*, vol. 93, pp. 129–140, 2023. doi: https://doi.org/10.29007/dkdv

[48] A. Sánchez-Gelabert and M. Elias, "Going online? Does transferring to online university increase the likelihood of graduation among students from lower social background?" *International Journal of Educational Technology in Higher Education*, vol. 20, no. 1, 2023. doi: https://doi.org/10.1186/S41239-023-00407-4

[49] M. Heydari, Y. Mousazadeh, R. Salmani, and E. Mehraeen, "Assessment of virtual education during the covid-19 pandemic from the perspective of faculty members and students: a cross-sectional descriptive study in northwest Iran," *BMC Medical Education*, vol. 23, no. 1, 2023. doi: https://doi.org/10.1186/s12909-023-04378-y

[50] M.-A. Cuzcano-Huarcaya, J. M. Vergaray, C. M. C.-S. Cruz, S. S. Diaz, and E. Flores, "Teaching competency in virtual education: Systematic review," *International Journal of Evaluation and Research in Education*, vol. 12, no. 3, pp. 1429–1439, 2023. doi: https://doi.org/10.11591/ijre.v12i3.24430

[51] E. Unsihuay-Tovar, V. L. Venegas-Mejía, and J. T. Esquivel-Grados, "Virtual didactic strategies and development of professional competencies in graduate students," *Revista Venezolana de Gerencia*, vol. 28, no. 9, pp. 745–756, 2023. doi: https://doi.org/10.52080/rvgluz.28.e9.46

[52] P. K. Paul, "Digital education: its uses and perception among the students of Raiganj university and adjacent institutions - the social, technological & economical context. *Economic Affairs (New Delhi*), vol. 68, no. 2, pp. 1179–1192, 2023. doi: https://doi.org/10.46852/0424-2513.2.2023.25

[53] W. Boualou and C. E. Mokhlis, "Impact of ICTs on knowledge transfer in Moroccan organizations: the case of the energy sector," *E3S Web of Conferences*, 412, 2023. doi: https://doi.org/10.1051/e3sconf/202341201006

[54] T. Qi, F. Wu, C. Wu, L. He, Y. Huang, and X. Xie, "Differentially private knowledge transfer for federated learning," *Nature Communications*, vol. 14, no. 1, 2023. doi: https://doi.org/10.1038/s41467-023-38794-x

[55] B. Song, J. Pan, Q. Qu, and Z. Li, "Multi-source transfer learning based on the power set framework," *International Journal of Computational Intelligence Sy*stems, vol. 16, no. 1, 2023. doi: https://doi.org/10.1007/S44196-023-00281-y

[56] Z. Liu, J. Guo, M. Yang, W. Yang, J. Fan, and K.-Y. Lam, "Privacy-enhanced knowledge transfer with collaborative split learning over teacher ensembles," *ACM International Conference Proceeding Series*, pp. 1–13, 2023. doi: https://doi.org/10.1145/3591197.3591303

[57] L. Foti, L. Warwick, E. Lyons, S. Dhaliwal, and M. Alcorn, "Knowledge transfer and innovation: universities as catalysts for sustainable decision making in industry," *Sustainability (Switzerland*), vol. 15, no.14, 2023. doi: https://doi.org/10.3390/su151411175

[58] N. Al-Sous, D. Almajali, A. T. Al-Radaideh, Z. Dahalin, and D. Dwas, "Integrated e-learning for knowledge management and its impact on innovation performance among Jordanian manufacturing sector companies," *International Journal of Data and Network Science*, vol. 7, no. 1, pp. 495–504, 2023. doi: https://doi.org/10.5267/j.ijdns.2022.8.009

[59] V. Nagy and L. Duma, "Measuring efficiency and effectiveness of knowledge transfer in e-learning," *Heliyon*, vol. 9, no. 7, 2023. doi: https://doi.org/10.1016/J.Helion.2023.e17502

[60] G. Deepak, A. Vibakar, and A. Santhanavijayan, "OntoInfoG: A knowledge fusion semantic approach for infographics recommendation," *International Journal of Interactive Multimedia and Artificial Intelligence*, vol. 8, no. 2, pp. 213–223, 2023. doi: https://doi.org/10.9781/ejimai.2021.12.005

[61] L. P. Delgado, A. P. Franco-Bacca, F. Cervantes-Alvarez, E. Ortiz-Vazquez, J. M. Ramon-Sierra, V. Rejon, M. L. Aguirre-Macedo, J. J. Alvarado-Gil, and G. Rodríguez-Gattorno, "Tailoring heat transfer and bactericidal response in multifunctional cotton composites," *Nanomaterials*, vol. 13, no. 3, 2023. doi: https://doi.org/10.3390/nano13030463

[62] T.-C. Yang and J.-H. Chen, "Pre-service teachers' perceptions and intentions regarding the use of chatbots through statistical and lag sequential analysis," *Computers and Education: Artificial Intelligence*, 4, 2023. doi: https://doi.org/10.1016/j.s.2022.100119

[63] S. B. Shum, A. Littlejohn, K. Kitto, and R. Crick, "Framing professional learning analytics as reframing oneself," *IEEE Transactions on Learning Technologies*, vol. 15, no. 5, pp. 634–649, 2022. doi: https://doi.org/10.1109/TLT.2022.3190055

[64] V. Mirata, C. Awinia, E. Godson, and P. Bergamin, "The future of technology-based learning at the open university of Tanzania," *International Journal of Emerging Technologies in Learning*, vol. 17, no. 15, pp. 28–42, 2022. doi: https://doi.org/10.3991/ejet.v17i15.33273

[65] R. U. Ayres, "The history and future of technology: Can technology save humanity from extinction?" *The History and Future of Technology: Can Technology Save Humanity from Extinction*, pp. 1–830, 2021. doi: https://doi.org/10.1007/978-3-030-71393-5

[66] Y.-L. Huamán-Romaní, F. Carrasco-Choque, E.-A. Maquera-Flores, J.-C. Lázaro-Guillermo, and F. Kuaquira-Huallpa, "Level of digital teaching competence on the verge of the post pandemic," *International Journal of Emerging Technologies in Learning*, vol. 17, no. 14, pp. 187–204, 2022. doi: https://doi.org/10.3991/ejet.v17i14.31039

[67] C. Cerrón-Castillo, Y.-L. Huamán-Romaní, R. Carrión-Abollaneda, M.-I. Rivero-Aedo, and H.-M. Manriquez-Zapata, "Perspectives on

reverse learning factors in university students," *RISTI - Iberica Journal of Informacao Systems and Technology*, 2022, pp. 94–109, 2022.

[68] A. Sivakumar, S. Jayasingh, and S. Shaik, "Social media influence on students' knowledge sharing and learning: An empirical study," *Education Sciences*, vol. 13, no. 7, 2023. doi: https://doi.org/10.3390/educsci13070745

[69] M. M. S. Missen, M. Boughanem, and G. Cabanac, "Opinion detection in blogs: What is still missing?" in *Proc. 2010 International Conference on Advances in Social Network Analysis and Mining*, ASONAM 2010, pp. 270–275, 2010. doi: https://doi.org/10.1109/ASONAM.2010.59

[70] S. Salazar-Palomino, Y. L. H. Romaní, D. Szczcpansky-Grobas, and A. Alarcón-Sucasaca, "Application of audiovisual resources in university students in rural areas," *VISUAL Review. International Visual Culture Review*, vol. 16, no. 2, pp. 137–151, 2024. doi: https://doi.org/10.62161/revvisual.v16.5251

Copyright © 2025 by the authors. This is an open access article distributed under the Creative Commons Attribution License which permits unrestricted use, distribution, and reproduction in any medium, provided the original work is properly cited (CC BY 4.0).