A Teaching Demonstration Set of a 5-DOF Robotic Arm Controlled by PLC

Jakkrit Kwantongon, Wuttiporn Suamuang, and Kanyuma Kamata

***Abstract*—Nowadays, there are various robotics courses and programs. The media in the robotics courses is vital in the classroom because it is set up in order to enable students to learn efficiently. Therefore, the goals of this study were 1) To develop a teaching demonstration of a Programmable Logic Controller (PLC)-controlled 5-axis robotic arm, 2) To determine the efficiency of a 5-axis robotic arm controlled by PLC teaching demonstration set, 3) To explore the learners' learning achievement using the PLC-controlled 5-axis robotic arm teaching demonstration set. 4) To explore students' satisfaction with a 5-axis robotic arm teaching demonstration set controlled by a PLC. This study based on experimental study, which included a sample group of 30 vocational students in the Diploma in Electrical Power who participated in the basic robotics course. From the evaluation of the efficiency of the built-in 5-axis PLC-controlled robotic arm teaching demonstration set. The robot arm was found that the efficiency of location and route testing was in accordance with international organization for standardization (ISO) 9283 requirements. Furthermore, students who studied with the robotic arm teaching demonstration set performed better than those who did not. The findings of the satisfaction survey found that students who learned with the 5-axis robotic arm controlled by PLC teaching demonstration set reported high satisfaction. Moreover, the developed teaching demonstration set could be used as a effective learning tool.**

***Index Terms*—Teaching demonstration set, robot, PLC.**

I. Introduction

Robots are increasingly being used in manufacturing processes in modern industrial plants. The articulating robot, also known as a mechanical arm, has a structure similar to a human arm [1]. The majority of the controls use a Programmable Logic Controller (PLC) as a controller to control these robots [2], [3]. This type of robot is designed for handling workpieces in the manufacturing process. Currently, this type of robot is being applied to work to be more capable than handling workpieces. The robot is applied in welding processes, painting, or robotics [4], [5] various parts in the automotive industry, as well as being a prototype for use in teaching in colleges.

In today's education, there are more robotics courses and courses that are taught. Using robots in robotics teaching and learning activities increases the students' attention [6]. Therefore, this article has studied the type of articulated robot or robotic arm by applying the robotic arm to the study together with the lessons to the expected learning outcomes [7].

In order to make the teaching activities effective and efficient. If the teacher lacks media (robotic arm) as an intermediary for teaching, it is difficult for learners to understand the content of more complex learning. Especially, Practical applications require real equipment in order to allow learners to practice programming skills. The teaching does not meet the intended learning objectives because of robot control skills. The research of [7]-[9]. conducted the research using robotics in the classroom mentioned that using robotics in the classroom resulted in more creative participation. Using robotics fostered problem-solving and teamwork skills, encourage students to improve their writing, reading, collaboration, and communication skills.

From the afore mentioned issues and concepts, this study focuses on finding ways to improve teachers' educational innovation to develop practical skills and knowledge of the subject while honing problem-solving abilities in accordance with desired characteristics. As the reason, there is a procedure for creating teaching materials in the form of teaching kits or teaching demonstrations by building a model robot from a prototype and controlling it with a PLC with the teaching for learners to learn movement, which includes the creation of guidelines to help teachers achieve a high level of effective technology and innovation use in their classrooms.

II. Research Objectives

1) To develop a teaching demonstration of a PLC - controlled 5-axis robotic arm.
2) To determine the efficiency of a 5-axis robotic arm controlled by PLC teaching demonstration set
3) To compare students' achievement between pretest and posttest for learning using 5- Degrees of Freedom (DOF) Robotic Arm.
4) To explore students' satisfaction on a 5-axis robotic arm teaching demonstration set controlled by a PLC.

III. Methodology

A. Population and Sample

The population was 473 students of the electrical power department. Kanchanapisek Vocational College, Nong Chok.

The sample used in this specific study were 30 students who were studying for the Vocational Certificate (Vocational Certificate) in the field of Electrical Power Engineering. The electrical power department at Kanchanapisek Vocational College, Nong Chok, Bangkok, Thailand, enrolled in an introductory robotics course, the sample was divided into 25 males, 5 females.

Manuscript received April 11, 2022; revised July 4, 2022.

The authors are with King Mongkut's University of Technology Thonburi, Thailand (e-mail: jakkrit.k@mail.kmutt.ac.th, wuttiporn.sua@kmutt.ac.th, kanyuma.j@mail.kmutt.ac.th).

doi: 10.18178/ijiet.2022.12.12.1772

IV. Design and Development

The current Research was designed based on ADDIE model, shown in Fig 1. The steps are as following.

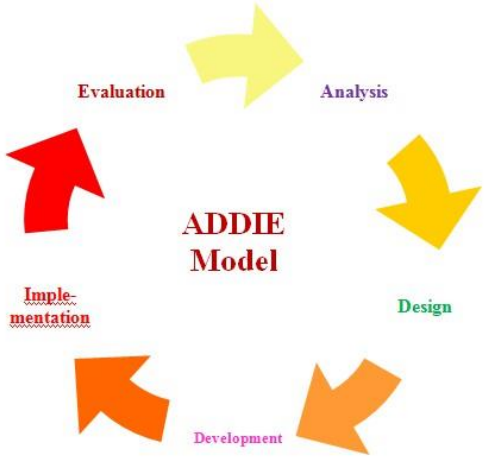

Fig. 1. Model for instructional media design for use with ADDIE model media [10].

A. Analysis

From analyzing teaching conditions in the introductory robotics course, the students were unable to complete the objectives that were defined. The main problem is the lack of media or teaching materials used for improving practical skills.

B. Design

1) The design of the teaching tools was a 5-axis robotic arm demo kit, shown in Fig. 2, Fig. 3, Fig. 4, and Fig. 5.
2) For organizing the classroom environment, the students were divided into six groups of four students each.
3) Learning activities included
   - Learning Activity 1 Basic knowledge of robotic arms
   - Learning Activity 2 Algorithm writing
   - Learning Activity 3 Order of operation and programming
   - Learning Activity 4 Reprogramming
   - Learning Activity 5 Program application
4) Achievement test (Pretest and posttest) based on multiple choice questions was created
5) Robot programming and control skills tests were developed as following:
   - Axial movement control skills of robotic arm
   - Rework control skills
6) Satisfaction survey was developed based on a 5-axis robotic arm teaching kit controlled by a PLC

C. Development

Developing and constructing a demonstration kit to teach a 5-axis robotic arm, a type of articulated robot, which is a prototype of a Dorna robot [11], is a type of articulated robot. The dimensions of the robot base are 72x72 millimeters (mm). (Upper Link) 152.4 mm (Lower Link) 203.2 mm, the height from the floor to the end of the handle is 206.4 mm, and the dimensions from the base to the wrist are 500 mm. As shown in Fig. 2

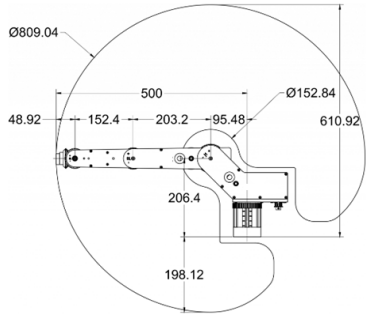

Fig. 2. Dimension of the robotic arm.

Degree and mechanical arm movement mechanism in each axis by specifying Axis 1 has a maximum working angle of 355 degrees and Axis 2 has a maximum working angle of 270 degrees. Axis 3 has a maximum working angle of 284 degrees. The working angle of axis 4 has a maximum working angle of 270 degrees, and the working angle of axis 5 has an infinite working angle. As shown in Fig. 3, Fig. 4

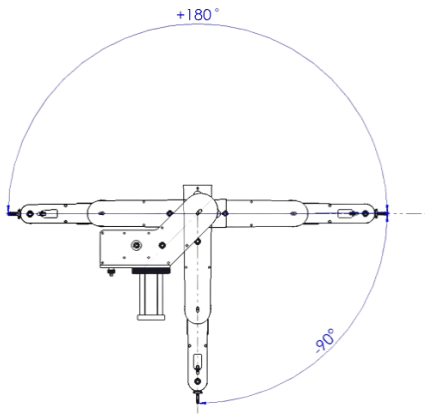

Fig. 3. The working scope of the robotic arm in each axis.

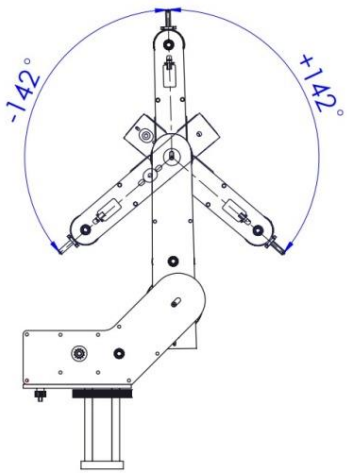

Fig. 4. The working scope of the robotic arm in each axis.

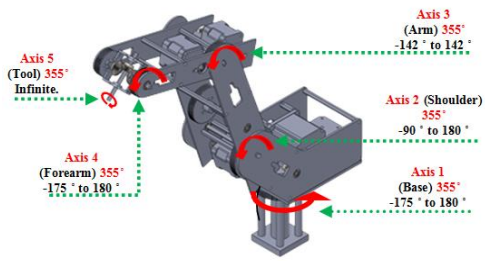

Fig. 5. The robotic arms degrees and scope of operation in 3D.

D. Robot Control System

A PLC (Programmable Logic Controller) [10] is a machine control device used to automate the operation of industrial machines. It can be easily programmed to control a variety of devices. A microprocessor is included in the PLC system. It is an important aspect of the PLC's operation. The signal from the input is either an analog or a digital signal, which is forwarded to the Central Processing Unit (CPU) for processing as well as sending a signal to the output. System wiring diagram (Stepper Drive to Stepper Motor) are shown in Fig. 6

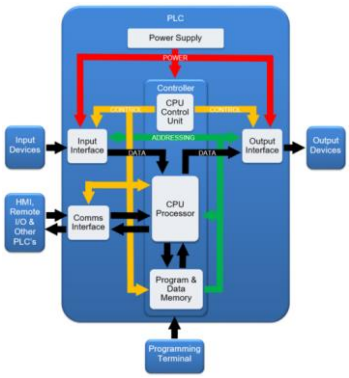

Fig. 6. The working principle of hardware [12].

E. System Wiring Diagram (Stepper Drive to Stepper Motor)

Fig. 7 shows connection between Output PLC to Stepper Drive and Stepper Motor by PLC supplying output to the Stepper Drive in order to control and command the Stepper Motor to work [13].

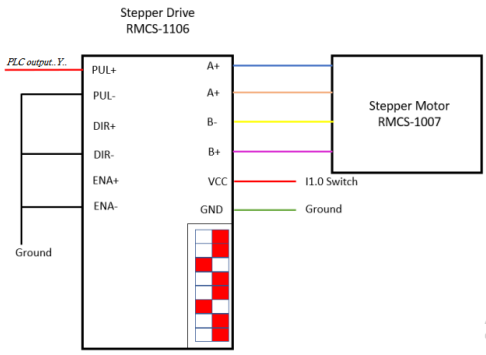

Fig. 7. Connection of the PLC to the stepper drive and the stepper motor.

F. Software Control

Designing control program used PLC Mitsubishi FX5U CPU Model program GX Works3 as programming software using LADDER DIAGRAM language. As shown in Fig. 8

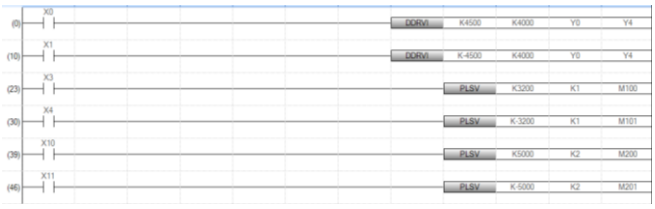

Fig. 8. Example of a programming ladder diagram.

G. Parameter for 5 DOF Robotic Arm

Parameter configuration for the movement of a 5-axis robotic arm is controlled by a PLC with a pulse signal speed control method, which uses the method of inputting the calculated parameters into the program. How many degrees does the mechanical arm move? It depends on the given parameter input rate as in Table I for the given robot. The only parameters required to locate the end (grip) of the robot are the angle of each joint and the movement of the linear axis (or a combination of the two for such robotic forms, such as Scar). However, there are several ways to define a point. The most common and convenient way to define a point is to specify the Cartesian coordinates for that point, for example, the position of the "end effector" in mm in the X, Y, and Z directions relative to the origin of the robot [14].

TABLE I: D-H PARAMETER FOR 5 DOF ROBOTIC ARM

(degree)	Parameter	Gear Ration
45˚	2304	4 : 1
90˚	4608	4 : 1
180˚	9216	4 : 1
360˚	18432	4 : 1

H. Data Collection

In this research, the data collection process was divided into two parts.

1) The tool for data collection was a teaching demonstration of a 5-axis robotic arm. Data collection methods are performed by testing the reproducible performance of the robot arm to determine the path tolerance. In the manner of picking up objects of size 30x30x40 mm from one position to another on the test field that has been created as defined in Cartesian coordinates, shown in Fig 9. The Cartesian coordinate system, or 2D plane coordinate system, is used to find the position of any point. The horizontal numerical line is called the X-axis, and the vertical number line is called the Y-axis, and the intersection of these two axes is called the origin and is denoted as "O", and the entry tolerance is measured. To determine the maximum and minimum working distance of the mechanical arm in the test field. As shown in Table II.

There are several methods to find a robot's error. The method employed in this research was iteration, which picked up an object from a position of X300,Y300 to a position of X-300,Y300 and determining the error of the position, which robot placed the object. Fig. 10 shows the error values in each iteration.

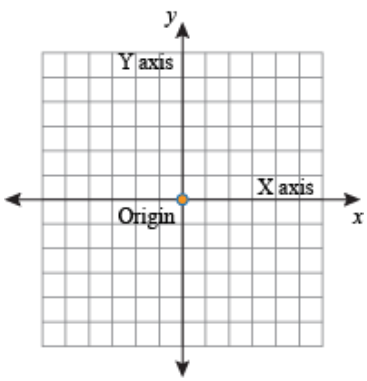

Fig. 9. Coordinate system.

TABLE II: THE EXPERIMENT WAS REPEATED BY PICKING AN OBJECT FROM A POINT (X300, Y300) TO A POINT (X-300, Y300) 10 TIMES

Times	Designated position (mm)		Position (mm)		ERRER%	
	X	Y	X	Y	X	Y
1	-300	300	-298	298	1.41	1.41
2	-300	300	-297	296	2.12	2.82
3	-300	300	-298	303	1.41	2.12
4	-300	300	-299	305	0.70	3.53
5	-300	300	-297	301	2.12	0.70
6	-300	300	-298	303	1.41	2.12
7	-300	300	-297	298	2.12	1.41
8	-300	300	-297	296	2.12	2.82
9	-300	300	-296	297	2.82	2.12
10	-300	300	-295	296	3.53	2.82
		Average			1.97	2.18

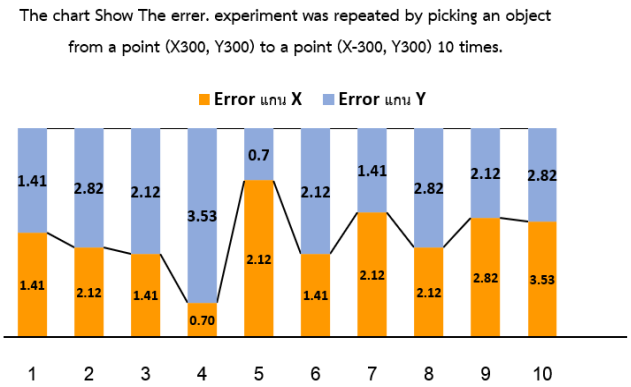

Fig. 10. The error values in each iteration.

I. Implementation

Fig. 11. Activities during the teaching practice of disassembling and disassembling robotic arm parts.

The researcher has two methods and procedures for collecting data.

1) The achievement test (pretest and posttest) was based on the multiple-choice questions. The test based on a PLC-controlled 5-axis robotic arm teaching demonstration set. A pre-class test was administered for the pretest. After that, learners learn from teaching and learning activities in practice. The skills of disassembling the robotic arm were practiced. As shown in Fig.11 and to practice movement control skills by having students write a program to control the movement of the robotic arm to move according to a specified degree. Students control of the handling of specimens from one position to another on the test field. where the teacher determines the position Then after that, students do a posttest at the end of the semester.
2) Satisfaction form was used to assess students' satisfaction on learning using demonstration of teaching a 5-axis robotic arm controlled by PLC. As shown in Table IV.

V. DATA ANALYSIS

Pretest, posttest, paired t-test, and descriptive statistics were used to determine the students' satisfaction with the 5-axis robotic arm teaching demonstration set, such as mean and standard deviation (S.D.).

A method for analyzing the efficiency of a 5-axis PLC-controlled robotic arm teaching demonstration set by finding the repeatability tolerance Apply the principle of measurement (calculation of measurement error) from the position of the X and Y axes on the test field and determine the absolute error and relative error.

VI. RESULTS

A. To Create a 5-Axis Robotic Arm Teaching Demonstration Kit That Is Controlled by a PLC.

The development of a demonstration set for teaching a 5-axis robotic arm controlled by a PLC as a teaching aid in an introductory robotics course includes a 5-axis mechanical arm robot that can be used in real-life situations.

B. To Find out the Efficiency of the PLC-Controlled 5-Axis Robotic Arm Teaching Demonstration Kit

A test of reproducibility of a robotic arm in the manner of picking up objects of size 30x30x40 mm from the position (X300, Y300) to the point (X-300, Y300) of a 5-axis robotic arm teaching demonstration kit controlled by PLCs has tolerances for repeatability and movement of each axis, with average tolerances of not more than ±5%, which tolerances are based on programming, position and size of the workpiece as well.

C. To Compare Students' Achievement between Pretest and Posttest for Learning Using 5-DOF Robotic Arm

5-DOF robotic arm was used as an instructional media in conjunction with teaching and learning in the ADDIE model. The findings revealed that There was a significant difference in the scores for the pretest (M = 14.97, SD =.81) and no posttest (M = 26.00, SD = 1.93) conditions; t (30) =-29.11, p<0.001. "Pretest and posttest." of those who learnt with a demonstration of teaching a 5-axis robotic arm controlled by a PLC

D. To Explore Students' Satisfaction on a 5-Axis PLC-Controlled Robotic Arm Teaching Kit

From satisfaction survey based on the 5-axis PLC-controlled robotic arm teaching demonstration kit found that the satisfaction was at a very high level. In order to consider in each aspect, the teachers' value was at high level

(= 4.37, S.D. = 0.403). The Robot media was at a very high level (= 4.53, S.D. = 0.278). Fig. 12 demonstrates students' satisfaction on a PLC-controlled 5-axis robotic arm teaching demonstration set.

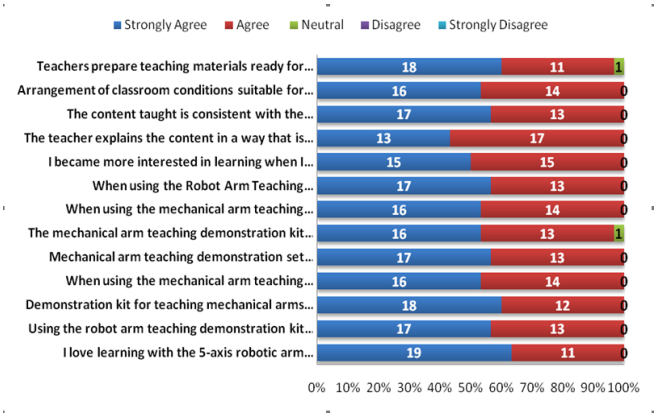

Fig. 12. User satisfaction on PLC-controlled 5-axis robotic arm teaching demonstration set.

VII. Conclusion

A. The Development of a Demonstration Set for Teaching a 5-Axis Robotic Arm Controlled by a PLC

as a teaching aid in an introductory robotics course includes a 5-axis mechanical arm robot that can be used in real-life situations. The 5- DOF robotic arm was found that the efficiency of location and route testing was in accordance with ISO 9283 requirements. Furthermore, students who studied with the robotic arm teaching demonstration set performed better than those who did not. The findings of the satisfaction survey found that students who learned with the 5-axis robotic arm controlled by PLC teaching demonstration set reported high satisfaction. Moreover, the developed teaching demonstration set could be used as a effective learning tool.

Conflict of Interest

The authors declare no conflict of interest.

Author Contributions

Jakkrit Kwantongon developed the 5-DOF Robotic Arm and collected data, Wuttiporn Suamuang analyzed the data and Kanyama Kamata designed methodology. However, the three researchers conducted the research and wrote the article together.

References

[1] C. Y. Tsai, C. C. Wong, C. J. Yu, C. C. Liu, and T. Y. Liu, "A hybrid switched reactive-based visual servo control of 5-DOF robot manipulators for pick-and-place tasks," *IEEE Systems Journal*, vol. 9, no. 1, pp. 119-130, 2014.

[2] P. Chevtsov, S. Higgins, S. Schaffner, and D. Seidman, "PLC support software at jefferson lab," *(No. JLAB-ACC-02-12; DOE/ER/40150-2320). Thomas Jefferson National Accelerator Facility (TJNAF), Newport News, VA (United States)*, 2002.

[3] W. VTian, W. Zhang, and X. Zhao, "Design of control system for pressure vessel inspection robot based on PLC," *In Journal of Physics: Conference Series*, vol. 1570, no. 1, p. 012022, June 2020.

[4] C. Fang, Y. T. Song, J. Wei, J. J. Xin, H. P. Wu, A. Salminen, and H. Handroos, "Design and analysis of the laser robotic welding system for ITER correction coil case," *Journal of Fusion Energy*, vol. 34, no. 5, 1060-1066, 2015.

[5] A. Gatej, N. Pyschny, P. Loosen, and C. Brecher, "Robot-based resistance soldering of optical components. Soldering & surface mount technology," 2012.

[6] Z. Sun, Z. Li, and T. Nishimori, "Development and assessment of robot teaching assistant in facilitating learning," in *Proc. International Conference of Educational Innovation through Technology (EITT)*, pp. 165-169, December 2017.

[7] S. Kubilinskiene, I. Zilinskiene, V. Dagiene, and V. Sinkevicius, "Applying robotics in school education: A systematic review," *Baltic Journal of Modern Computing*, vol. 5, on.1, pp. 50-69, 2017.

[8] A. Khanlari and F. Mansourkiaie, "Using robotics for STEM education in primary/elementary schools: Teachers' perceptions," in *Proc. International Conference on Computer Science & Education (ICCSE) IEEE*, pp. 3-7, July 2015.

[9] T. Hoebert, W. Lepuschitz, E. List, and M. Merdan, "Cloud-based digital twin for industrial robotics," in *Proc. International Conference on Industrial Applications of Holonic and Multi-agent Systems*, pp. 105-116, August 2019.

[10] G. M. Piskurich, *Rapid Instructional Design: Learning ID Fast and Right*, John Wiley and Sons, 2015.

[11] dorna.ai. [Online]. Available: https://dorna.ai/?fbclid=IwAR3GqIDNEsp8ArZxDMofgPoPUGbn7kqwhnPu8AMaK8Wh7uaxBTYuaC0QTpI

[12] Ladder logic world. [Online]. Available: https://ladderlogicworld.com/

[13] M. Dababneh, W. Emar, and I. Ttrad, "Chopper control of a bipolar stepper motor," *International Journal of Engineering*, vol. 7, no. 2, pp. 61-73, 2013.

[14] V. Patidar and R. Tiwari, "Survey of robotic arm and parameters," in *Proc. IEEE International Conference on Computer Communication and Informatics (ICCCI)*, pp. 1-6, January 2016.

Copyright © 2022 by the authors. This is an open access article distributed under the Creative Commons Attribution License which permits unrestricted use, distribution, and reproduction in any medium, provided the original work is properly cited (CC BY 4.0).

Jakkrit Kwantongon is 2nd year master's degree student at the Electrical Technology Education Department, Faculty of Industrial Education and Technology, King Mongkut's University of Technology Thonburi, Thailand. His research relates to a teaching demonstration set of a 5-DOF robotic arm controlled by PLC.

Wuttiporn Suamuang is an instructor at Electrical Technology Education Department, Faculty of Industrial Education and Technology, King Mongkut's University of Technology Thonburi, Thailand. Her research relates to teaching and learning in the area of computer. She got a scholarship for her Ph.D. in 2016.

Kanyuma Kamata is a lecturer at the Electrical Technology Education Department, Faculty of Industrial Education and Technology, King Mongkut's University of Technology Thonburi, Thailand. Her research relates to teaching and learning in the area of electronics, electrical, and robotics.