A Theoretical Framework for the Adoption of Web-Based Learning Management Systems in Saudi Higher Educational Institution

Asmaa Hatem Rashid Abogamous

***Abstract*—This article describes the development of a theoretical framework for factors that influence adoption of web-based Learning Management Systems (LMS) in Saudi Higher Educational Institutions (SHEI). LMSs help such institutions manage the information required for planning and making informed decisions. LMSs also facilitate effective and efficient information management, allowing SHEI to improve their abilities in teaching and learning experience. However, higher learning institutions remain hesitant to adopt LMS projects. Such systems are relatively recent additions to educational institutions; thus, there are certain roadblocks to adoption. Thus, a framework is proposed to facilitate LMS adoption in SHEIs. The proposed framework considered 17 factors collected from relevant literature, with unified theory of acceptance and use of technology and technology-organisation-environment serving as the foundation. The proposed framework is expected to help SHEIs identify and comprehend the various individual, technological and environmental factors that must be considered when implementing an LMS.**

***Index Terms*—Web-based systems, electronic management system (LMS), factors, Saudi higher education institutions (SHEI), adoption, efficient, decision, UTAUT, TOE.**

I. Introduction

Teachers are turning to E-learning, which offers many potential benefits, e.g. improving student performance, boosting student confidence in their ability to learn and improving student self-esteem. In 2020, COVID-19 forced education administrations around the world to adopt E-learning in different educational environments [1]. It has been stated that the Learning Management System (LMS) is now the leading solution for the education sector, with its focus on technology and innovation, E-learning can now rescue or save our society from this emergency [2]. LMS is a web-based system for managing all aspects of training and education. Schools and colleges across the nation use this for delivering lectures and exams to their students through internet at anyplace and anytime [3].

In this context, educational environments seek to provide customised education to students, increase staff engagement, deliver, track and handle education and generate reports on student performance [4]. Although an LMS can improve access flexibility, provide easy and collaborative learning, improve processes and increases productivity, such systems also exhibit certain disadvantages. From the student perspective, these disadvantages include insufficient connection with instructors, limited peer contact, a lack of social engagement and a lack of independence, which collectively reduce the quality of education [5], [6]. From an organisational perspective, the disadvantages include high maintenance costs, the need for IT resource management, customisation learning, end-user support and other related issues as data security and training [6]. Thus, to improve E-learning adoption, there is a need to investigate way to address the aforementioned issues.

E-learning is a new technology-based learning modality that is not simply an extension of traditional teaching and learning models but rather a radical shift from such models toward more innovative and collaborative approaches. In addition, prior to the COVID-19 pandemic, studies have stated that E-learning is still poor in education [7]-[11]. According to Alotebi (2019), poor adoption of E-learning may be attributed to a variety of challenges and factors from both staff and student perspectives [12]. However, effective E-learning requires knowledge of the adoption determinants and the challenges facing existing E-learning systems. There is a lack of consensus regarding the important problems and variables that have influenced adoption of E-learning during the COVID-19 epidemic, resulting in a knowledge vacuum in terms of the critical aspects of E-learning usage during this pandemic [13]-[15]. In addition, stakeholders in higher education systems, including governments, institutions and students, require successful and effective material delivery via E-learning platforms.

Therefore, in this study, we attempted to determine the factors that affect adoption of LMSs in Saudi instruction establishments (SHEI). We then developed and evaluated an LMS adoption framework for SHEI.

Organisations are slow to embrace new technology, which can impact performance. New tools and technologies are developed for businesses every day; however, they are too busy to perform in-depth study into their requirements. Effective research can help organisations understand the factors that influence the acceptance and performance of new technologies. We believe that our findings will help educational institutions, e.g. universities, make informed decisions about how to incorporate new technology in order to improve educational outcomes. Previous studies into the issues educational organisations face in a rapidly developing countries, e.g. the Kingdom of Saudi Arabia (KSA), have

Manuscript received December 9, 2021; revised March 4, 2022.

Asmaa Hatem Rashid Abogamous is with Department of Computer and Information Science, Applied Collage, Taibahu University, Al-Madinah Al-Munawwarah 20012, Saudi Arabia (e-mail: aabogamous@taibahu.edu.sa).

doi: 10.18178/ijiet.2022.12.7.1658

been limited.

Several previous studies have investigated E-learning adoption from various perspectives; however, the current study attempts to contribute to the literature by developing an LMS adoption framework specific to KSA as a case study. We expect that the proposed framework can serve as a model for other developing nations. The findings of this study are expected to have substantial impact on educational organisations' abilities to make strategic decisions about Information and Communication Technology (ICT) innovation. In addition, cultivating a collaborative and innovative culture.

The remainder of this paper is organised as follows. Background information and related work are discussed in Section II. Section III describes the adoption of learning management systems. Section IV describes research framework and hypotheses development, and Section V presents research methodology. Section VI describes findings and discussion. Limitations and future recommendations are discussed in Section VII. Finally, conclusions are presented in Section VIII.

II. Background and Related Work

There is no universally agreed definition of what constitutes an E-learning system. Some have defined an E-learning system as software that transmits educational resources [16]-[18], and others use words like course management system and virtual learning environment to describe E-learning systems [17]. However, each independent system is unique in terms of specifications, components and functionalities. Some systems may offer a rather limited feature set, e.g. online classes, and others may offer a wider variety of features, e.g. online courses, grade tables and student administration. Cheng *et al.* [19] described E-learning as a computer system that allows students to learn online.

In this paper, we define the LMS as a computer application or web technology that can be accessed by its users (students and instructors) from any location at any time. AN LMS is used to organise, deliver, track, evaluate and manage educational activities. The primary LMS components of an LMS are a server that provides basic functionality and a user interface that educators, students and administrators can utilise. The architecture of the LMS concept considered in this study is shown in Fig. 1.

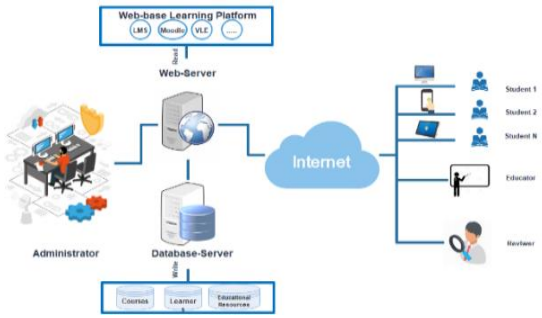

Fig. 1. LMS architecture.

Due to the rapid growth of ICT, E-learning has been included in conventional instructional systems [20], [21]. E-learning is particularly useful for delivering cost-effective education regardless of time or location [20], [22], [23]. Over the last few years, developing countries have shifted to more cost-effective and innovative methods of delivering education to students [24]. Higher Education Institutes (HEI) in developing countries have established are actively consider the importance of E-learning [25]. In addition, it is becoming increasingly important for students to complete university education to develop the technical skills required for future career advancement [26].

However, integrating ICT into HEIs does not guarantee that such systems will be accepted or used in future. Many efforts have been undertaking to establish E-learning in developing countries; however, underutilisation continues to be a challenge [27]. In addition, to date, the creation of content and infrastructure has been inadequate in terms of effective E-learning system deployment [20]. Students will not benefit from such methods and technologies unless they are willing to use them effectively, and student attitudes about embracing and accepting emerging technology influence the effectiveness and efficiency E-learning systems [20], [28], [29].

Student attitudes toward the adoption and use of E-learning systems have a significant influence on effective deployment of ELS. Numerous empirical investigations in developed countries [30], [31] have presented evidence to support these observations. However, in developing countries, issues that may affect technology adoption are more difficult to identify. To address this issue, policymakers and practitioners in developing countries must first comprehend the factors that influence the adoption and acceptability of E-learning in order to improve learner usage behaviour. Existing literature shows that individual, societal and organisational settings in a culture have a substantial impact on user adoption and acceptability [32]-[34].

III. Adoption of Learning Management Systems

The adoption of LMS is still in its early stages in education sector, according to numerous studies in education; the majority of these studies are adoption technology in the healthcare sector. Both technological and organisational obstacles have been identified in these investigations [35]. Thus, the goal of this study is to identify the factors that influence LMS adoption in SHEIs. To identify the factors related to LMS adoption in SHEIs from recent studies, we have developed a theoretical framework based on the Unified Theory of Acceptance and Use of Technology (UTAUT) and the Technology-Organisation-Environment framework (TOE). This combination of UTAUT and TOE allowed us to develop a model that reflects the pre-adoption, adoption-decision and post-adoption phases of IS product adoption.

According to Taylor (1995), social science researchers begin with models and identifying which data are required to establish links between relevant concepts. Concepts become theoretical structures as they construct theory and become measurable. In contrast, theories are validated using propositions and hypotheses according to techniques that are appropriate for the given model or theory [36].

Various theories have been considered to examine the intent to use new technologies and the actual use of such technologies, including diffusion of innovation theory [37], the theory of reasoned action [38], the Technology Acceptance Model (TAM) [27], the Theory of Planned Behaviour (TPB) [39], combined TAM-TPB [40], the motivational model [41], social cognitive theory [42], the unified model of E-government adoption [43], [44], UTAUT [45], TOE [46] and a combination of UTAUT and TOE [35], [46]-[48].

According to recent studies, the UTAUT is can explain up to 70% of the variance in intended behaviour [46], [49], [50], and it has been widely used in a variety of sectors, including ERMs and the education sector [46], [51]. The UTAUT model was made feasible via thorough examination of existing models in order to realise unified understanding of user acceptability [46], [52].

The TOE scheme is an organisational-stage theory that incorporates both internal and external elements into a multi-angle framework. TOE is more akin to a taxonomy for identifying factors than it is for explaining such factors. This approach makes a significant contribution in that it provides researchers with an open space to categorise the attributes of each context in a large domain. The factors in each context are regularly selected from previous studies that were determined to be appropriate for the study's situation. As a result, several studies on the adoption of Information Systems (IS) have employed TOE [46], [53], [54]. Fig. 2 shows the integrated model between UTAUT and TOE, as well as study themes.

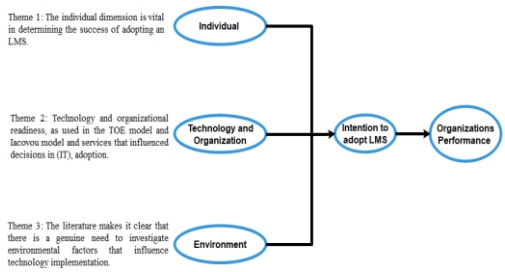

Fig. 2. Integrity model between UTAUT and TOE theories.

IV. Research Methodology and Hypotheses Development

In this study, we focused on factors that influence the adoption of web-based LMSs in SHEIs. We conducted a thorough literature review and utilised the findings to investigate benefits and challenges associated with deploying LMSs in SHEIs.

The factors that influence LMS adoption were determined using content analysis. Here, relevant articles were identified using relevant keywords, i.e. LMS adoption, e-records system factors, factors affecting technology adoption and factors for LMS adoption, in database, and website search processes. Note that the literature search was limited to papers written in English. The substance of all articles was evaluated and classified to guide the selection of relevant articles. In total, 197 papers were examined. In addition, relevant factors were identified and contained. To fine-tune the proposed framework, the top mentioned factors were selected. Table I shows the top-cited factors are listed, and Table II describes research hypothesis, Fig. 3 shows the proposed conceptual framework for web-based LMSs.

TABLE I: Top-Cited Factors

Construct	Description	Studies
1. Attitude	Referred to character, behavior, or frame of mind to accept changes.	[35], [55]-[57]
2. Knowledge and skills	Referred to awareness of internet skills and taking responsibility for e-learning	[35], [58]
3. Computer Self-Efficacy	A one's ability to execute information technology-related tasks on a computer system is referred to as their technical skills.	[35], [49]
4. Satisfaction	Response and feedback from users after using LMS.	[47]
5. Language	Refers to language problems when using an LMS that do not support my language	[59], [60]
6. Perceived Usefulness (PU)	The extent to which a person believes that implementing a particular system would increase his or her work performance.	[35], [61], [62]
7. Perceived Ease of Use (PEOU)	reflected on believing ease of use to users. This is made possible when the (IT) infrastructure use and management is easy due to the flexibility, scalability, and power of hosted cloud services, making the cloud a powerful tool for enabling (IT), success.	[35], [62]
8. Complexity	Referred to ease in using and understanding new technology. LMS can be complicated and challenging to use because it consists of many systems, and integrating many functions.	[63], [64]
9. Combability	Reflected in the fitness of the organization's values, present needs, and previous practices like existing IT systems, methods, and requirements inside the educational institutions.	[65], [66]
10. ICT infrastructure	The infrastructure is available for the organization's operation and management like composite hardware, software, network resources, and services	[67], [68]
11. Adaptability	In e-learning, adaptability refers to a system's capacity to change in order to meet individual academic demands.	[69], [70]
12. Trust & Reliability	Referred to the user's confidence in using the systems and was seemed like an essential factor for the successful adoption of LMS.	[71], [72]
13. Government Support	Whereas, the laws' regulations, policies, and initiatives from the government.	[12], [73]
14. Laws and Regulation compliance	Referred to as abiding by government legislation and policies, especially relating to data security and privacy protection. Though data security is the concern of every user of LMS.	[35], [74]
15. Polices	According to Baker (2012), depending on whether government policy supports or discourages innovation, government regulation may have a positive or negative influence on businesses. Regulatory inclinations in organizations are designed to accommodate audit trails and statutory compliance.	[35], [75]
16. Management Awareness	Referred to the nature and functions of executives and managers in the organizations towards LMS. Management support includes accepting changes and providing resources for change found to be an essential determinant in adopting LMS.	[76], [77]
17. Competitive Pressure	Competitive pressure arises when an institution is concerned about losing competitive advantages to rival institutions that have adopted sophisticated technology.	[35], [78], [79]

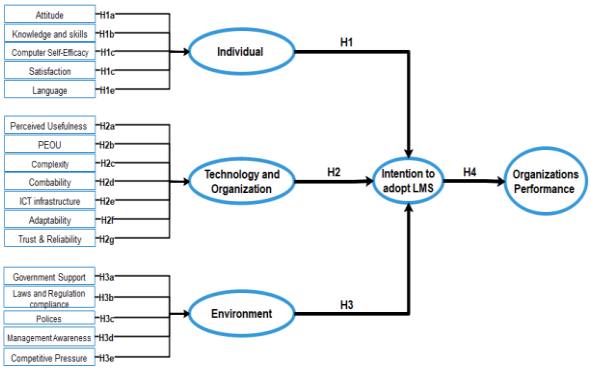

Fig. 3. Proposed conceptual framework for web-based LMSs.

TABLE II: RESEARCH HYPOTHESIS

Hypothesis			Relation
H1	Individual Factors		
	H1a	Attitude	+
	H1b	Knowledge and skills	+
	H1c	Computer Self-Efficacy	+
	H1d	Stratification	+
	H1e	Language	+
H2	Technology and Organization Factors		
	H2a	Perceived Usefulness	+
	H2b	Perceived Ease of Use	+
	H2c	Complexity	+
	H2d	Combability	+
	H2e	ICT infrastructure	+
	H2f	Adaptability	+
	H2g	Trust & Reliability	+
H3	Environment Factors		
	H3a	Government Support	+
	H3b	Laws and Regulation compliance	+
	H3c	Polices	+
	H3d	Management Awareness	+
	H3e	Competitive Pressure	+
H4	LMS adoption has a decisive role in an organization performance		

Fig. 4 shows the smart-PLS model for the proposed conceptual framework.

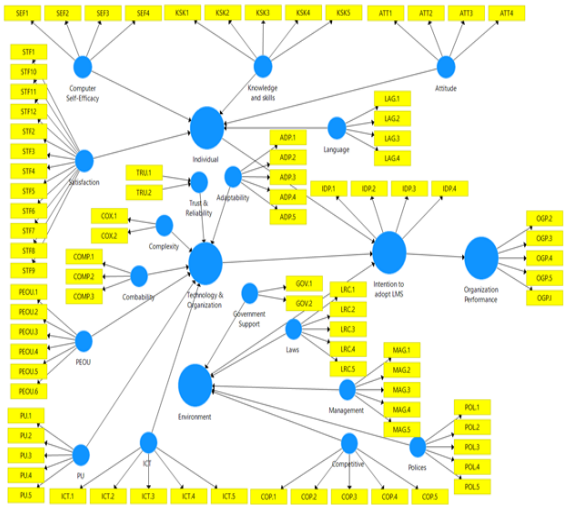

Fig. 4. Smart-PLS model for the proposed conceptual framework for web-based learning management systems.

V. RESEARCH METHODOLOGY

A. Literature Review

The focus of our literature review was the use of ICT in Saudi universities. Here, ScienceDirect, Emerald, IEEE Xplore, Scopus and Web of Sciences were used to access the corresponding literature research because these sources contain major IS journals and high-quality peer reviewed IS conference papers. Using the search criteria from the specified databases, 197 articles were discovered initially. The criteria were then modified by excluding publications that were repetitive, non-English or represented research in progress. These qualifying conditions restricted the number of publications in the sample, making the research studies more achievable [80]. After the quality evaluation, a total of 20 papers were selected for further investigation. Here, the theme analysis approach [81] was used during the analysis step. In the subsequent stage, a list of the factors mentioned in the research was compiled. Note that the complete list of variables includes all suggested and used factors from the preceding study. The factors were then gathered, merged and filtered to separate similar defining factors [82]. In addition, the discovered factors were be related to the authors who utilised such characteristics as factors in their research (Fig. 4).

B. Data Analysis Process

In this study, we employed SPSS 20 to test the reliability and validity of factors considered in the proposed framework. In addition to smart PLS for the method of analysis, hypothesis testing, and building the framework based on the assessment theoretical framework. The data analysis process is illustrated in Fig. 5.

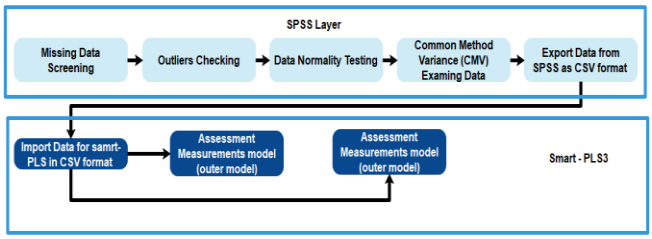

Fig. 5. Data analysis process.

C. Sampling and Survey Administration

As stated previously the general focus of this study was HEIs in developing countries. Thus, as a case study, an online questionnaire about the use of LMSs was administered to students at Taibahu University (TU) in the KSA. Here, undergraduate students studying Computer and IS, Management, and Accounting were participated in this survey. The selected students were sent an invitation letter with a link to the survey. Google Forms was used to administer the survey, and 45 incomplete replies were rejected. As a result, 90 valid questionnaires were collected at a response rate of 66.6%, which is acceptable for internet surveys, where the typical response rate is (22–59.4%) in IT research [35], [83].

D. Questionnaire Development

The primary data collection technique used in this study was the questionnaire. As shown in Table III, the questionnaire instrument was created based on a study of published studies on student adoption and the use of

web-based LMSs.

TABLE III: QUESTIONNAIRE DEVELOPMENT

Construct	Number of Items	Studies
Attitude	4	[35], [55]-[57], [84], [85]
Knowledge and skills	5	[35], [58], [86], [87]
Computer Self-Efficacy	4	[35], [49], [88]
Satisfaction	12	[47]
Language	4	[59], [60]
Perceived Usefulness (PU)	5	[35], [61], [62]
Perceived Ease of Use (PEOU)	4	[35], [62]
Complexity	2	[63], [64]
Combability	3	[65], [66]
ICT infrastructure	5	[35], [67], [68]
Adaptability	5	[35], [69], [70], [89], [90]
Trust & Reliability	2	[71], [72]
Government Support	2	[12], [73]
Laws and Regulation compliance	5	[35], [74], [87]
Polices	5	[35], [75], [91]
Management Awareness	6	[76], [77]
Competitive Pressure	5	[35], [78], [79]
Intention to adopt LMS	5	[35], [92]
Organization Performance	5	[35]

E. Sample Descriptive Analysis

The questionnaire gathered demographic data and questions about the web-based LMSs used in Saudi HEIs. Table IV details the demographics of the respondents.

TABLE IV: RESPONDENT DEMOGRAPHICS

Gender	Frequency	Percent
Male	17	18.9 %
Female	73	81.1 %
Total	90	100 %
Age		
18 to 22 Years	71	78.9 %
Up to 23 Years	19	21.1%
Total	90	100 %
Qualifications		
Diploma degree	77	85.6 %
Bachelor degree	13	14.4 %
Total	90	100 %
Computer Experience		
Less than two years	31	34.4 %
2 - 4 Years	49	54.4 %
4 - 6 Years	10	11.1 %
Total	90	100 %
English Level		
Poor	7	7.8 %
Medium	70	77.8 %
Good	13	14.4 %
Total	90	

VI. FINDINGS AND DISCUSSION

A. Analysis of Measurement Model

The reliability, convergent and discriminant validity of the measuring model were evaluated in a pilot study. Pre-testing allows the researcher to examine a number of important aspects of the questionnaire [93]. For example, consider the clarity of the instructions and questions, the cover letter, the likely response rate and the cost of administering the questionnaire. According to the Dashti (2017), a necessary pilot study should be conducted for original questionnaires [94]. All constructs in this study were tested by several researchers worldwide.

Here, reliability analysis was applied to assess the internal validity and consistency of the constructs used for each variable. The degree to which the measurement values are consistent and error-free is referred to as ‘reliability’ in this context. Measuring construct dependability or internal consistency determines the similarity of the survey instrument's items [93].

In addition, Cronbach's alpha coefficient was employed to assess the construct's internal consistency. Cronbach's alpha coefficient values are in the range of 0 to 1.0 [95], and the reliability of the survey items was assessed using Cronbach's alpha scale [96], [97]. This value should be greater than 0.7 that indicate acceptable internal consistency. The five-point Likert scale runs from (1) to (5), where (1) represents strong disagreement and (5) represents strong agreement. Throughout the paradigm, the Likert scale was used to measure variables. In addition, standard deviation measure the departure from the mean. The results of the reliability analysis of items for all model variables are summarised in Table V.

TABLE V: MEASUREMENT MODEL RESULTS (RELIABILITY ANALYSIS & CONVERGENT VALIDITY)

Latent Variable	Items	Item Loading	Cronbach's α	Composite Reliability CR	Average Variance Extracted (AVE)
Attitude	ATT1	0.631	0.923	0.963	0.929
	ATT2	0.912			
	ATT3	0.928			
	ATT4	0.663			
Knowledge and skills	KSK1	0.855	0.847	0.891	0.622
	KSK2	0.722			
	KSK3	0.735			
	KSK4	0.818			
	KSK5	0.759			
Computer Self-Efficacy	SEF1	0.927	0.894	0.928	0.764
	SEF2	0.895			
	SEF3	0.921			
	SEF4	0.740			
Stratification	STF1	0.818	0.914	0.930	0.626
	STF2	0.722			
	STF3	0.792			
	STF4	0.782			
	STF5	0.762			
	STF6	0.752			
	STF7	0.667			
	STF8	0.762			
	STF9	0.547			
	STF10	0.883			
	STF11	0.792			
	STF12	0.736			
Language	LAG.1	0.761	0.773	0.864	0.679
	LAG.2	0.849			

	LAG.3	0.847			
	LAG.4	0.434			
	PU.1	0.771			
	PU.2	0.780			
Perceived Usefulness	PU.3	0.912	0.897	0.925	0.712
	PU.4	0.886			
	PU.5	0.859			
	PEOU.1	0.897			
	PEOU.2	0.761			
Perceived Ease of Use	PEOU.3	0.874	0.929	0.947	0.782
	PEOU.4	0.903			
	PEOU.5	0.932			
	PEOU.6	0.673			
Complexity	COX.1	0.828	0.744	0.880	0.787
	COX.2	0.942			
	COMP.1	0.892			
Combability	COMP.2	0.887	0.852	0.910	0.772
	COMP.3	0.856			
	ICT.1	0.870			
	ICT.2	0.912			
ICT infrastructure	ICT.3	0.913	0.941	0.955	0.809
	ICT.4	0.908			
	ICT.5	0.894			
	ADP.1	0.926			
	ADP.2	0.956			
Adaptability	ADP.3	0.897	0.947	0.962	0.863
	ADP.4	0.896			
	ADP.5	0.621			
Polices	POL.1	0.886			
	POL.2	0.804			
	POL.3	0.823	0.927	0.946	0.778
	POL.4	0.958			
	POL.5	0.929			
Management Awareness	MAG.1	0.879			
	MAG.2	0.929			
	MAG.3	0.920	0.921	0.941	0.762
	MAG.4	0.780			
	MAG.5	0.850			
Competitive Pressure	COP.1	0.803			
	COP.2	0.920			
	COP.3	0.878	0.923	0.942	0.765
	COP.4	0.837			
	COP.5	0.839			
Intention to adopt LMS	IDP.1	0.894			
	IDP.2	0.883	0.863	0.916	0.784
	IDP.3	0.781			
	IDP.4	0.660			
Organization Performance	OGP.I	0.894			
	OGP.2	0.935			
	OGP.3	0.903	0.948	0.961	0.828
	OGP.4	0.893			
	OGP.5	0.924			

The degree to which the observed variable is connected to the latent variable it is expected to measure is shown by item loading, which also shows the item's level of dependability. In other words, the relationship between each variable's measured indication and the reflecting concept [98]. The indicator reliability was investigated using indicator loadings, which are also referred to as factor/outer loadings in PLS-SEM. Stevens (2012) advises eliminating entries with factor loading less than 0.3 [99]. If the model's fit remains poor, elements with the lowest factor loading should be removed until the model's fit improves. Hair et al. (2014) proposed that the scale's problems with factor loadings less than 0.40 should be eliminated. Note that items with factor loadings between 0.40 and 0.70 should only be removed if removing the indicator results in an increase in the Average Variance Extracted (AVE) value over the suggested threshold. The researcher used the PLS algorithm to evaluate the model's item loadings [100]. Then, all items with low factor loading values were eliminated, as shown in Fig. 7.

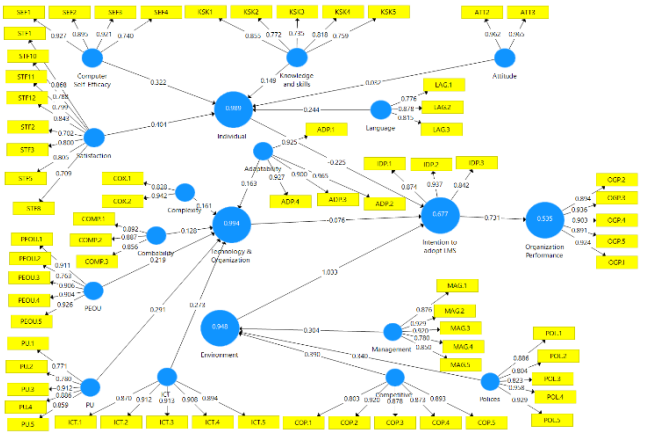

Fig. 6. Proposed conceptual framework for web-based LMSs (after deleting factor loading <0.70).

B. Discriminant Validity

The final stage of verifying the quality standards under the measurement model was discriminant validity. The objective of discriminant validity testing is to verify that a reflective construct's connections with its indicators are as strong as possible [101]. The traditional methods of measuring discriminant validity are the Fornell-Larcker criterion (i.e. the squared root of AVE) and the items' cross-loadings. In this study, discriminant validity was assessed using these two methods, along with the recently advanced HTMT criterion [102]. Each of these criteria is explained in the following sections. Discriminant validity was investigated using the Fornell–Larcker criteria by comparing the correlation estimates between components with the square root of the AVE of the relevant constructs [103]. Here, discriminant validity is established if the correlation estimates between components do not exceed 0.85 and the square root of each construct's AVE value is greater than its correlation with another construct [103], [104]. In this investigation, discriminant validity was proven, as shown in Table VI. Here, the off-diagonal correlation values with other constructs are less significant than the squared roots of the AVE for each construct (i.e. the diagonal values shown in bold). As a result, these findings provide adequate proof that the constructs' discriminant validity has been demonstrated sufficiently.

TABLE VI: FORNELL–LARCKER CRITERION (CORRELATION BETWEEN MAIN CONSTRUCTS)

	Adaptability	Attitude	Combability	Competitive	Complexity	Computer Self-Efficacy	Environment	ICT	Individual	Intention to adopt LMS	Knowledge and skills	Language	Management	Organization Performance	PEOU	PU	Polices	Satisfaction	Technology &Org
Adaptability	0.929																		
Attitude		0.964																	
Combability			0.878																
Competitive				0.874															
Complexity					0.887														
Computer Self-Efficacy						0.874													
Environment							0.742												
ICT								0.807											
Individual									0.861										
Intention to adopt LMS										0.996									
Knowledge and skills											0.589								
Language												0.524							
Management													0.573						
Organization Performance														0.565					
PEOU															0.556				
PU																0.594			
Polices																	0.532		
Satisfaction																		0.594	
Technology &Org																			0.691

PLS-SEM provides the cross-loading values for all items by correlating each latent variable's component scores and their relationships in the model [104]. To achieve discriminant validity, an indicator's loadings on its assigned latent variable should be greater than all other latent variables' loadings [104], [105]; otherwise, the cross-loading problem may be present among the indicators, which may indicate a problem within the items [104]. From the results of assessing the cross-loading values, we found that each issue of the respective construct has higher loadings compared to others in their relative rows. Thus, adequate discriminant validity was confirmed between all constructs [98].

C. Structural Model Analysis

The study hypotheses and the connections between constructs were explored. Here, the Smart-PLS algorithm (version 3.0) was used. Fig. 4 and Fig. 6 show the findings in terms of path coefficients and hypotheses, respectively. The UTAUT and TOE models were used in this investigation. The findings outline the connections between exogenous and environmental elements to pinpoint factors that influence LMS adoption. The hypotheses were tested against the structural sub-models that make up the proposed framework. Here, the content validity and construct reliability were checked, and the results exhibited a good fit. The existence of discriminant validity, convergent validity and composite reliability was used to assess the validity of the proposed framework. In addition, the value of Cronbach's alpha for each component was computed to assess its internal consistency. The goodness-of-fit estimates of the correlations among exogenous variables was estimated using SEM analysis. We found that all measurement requirements were satisfied satisfactorily. The findings of the hypothesised connections are shown in Table VII. Overall, the results support the hypothesis. The findings indicate that the endogenous factors considered in this study have a substantial impact on whether the hypotheses were accepted and supported.

TABLE VII: SUMMARY OF FINDINGS FOR RESEARCH HYPOTHESIS

Hypothesis	β	Std. Error	T value	P Values	Results
Adaptability-> Technology & Organization	0.163	0.038	4.329	0.000	Supported **
Attitude -> Individual	0.032	0.022	1.403	0.161	Supported *
Combability-> Technology & Organization	0.128	0.038	3.403	0.001	Supported **
Competitive-> Environment	0.39	0.037	10.655	0.000	Supported **
Complexity -> Technology & Organization	0.161	0.035	4.652	0.000	Supported **
Computer Self-Efficacy -> Individual	0.322	0.028	11.69	0.000	Supported **
Environment -> Intention to adopt LMS	1.033	0.091	11.308	0.000	Supported **
ICT -> Technology & Organization	0.273	0.048	5.692	0.000	Supported **
Individual -> Intention to adopt LMS	0.225	0.115	1.952	0.051	Supported *
Intention to adopt LMS -> Organization Performance	0.731	0.064	11.35	0.000	Supported **
Knowledge and skills -> Individual	0.149	0.025	5.844	0.000	Supported **
Language -> Individual	0.244	0.018	13.947	0.000	Supported **
Management-> Environment	0.304	0.043	7.046	0.000	Supported **
PEOU -> Technology & Organization	0.219	0.054	4.056	0.000	Supported **
PU -> Technology & Organization	0.291	0.07	4.132	0.000	Supported **
Polices -> Environment	0.34	0.041	8.299	0.000	Supported **
Satisfaction -> Individual	0.404	0.03	13.618	0.000	Supported **
Technology & Organization -> Intention to adopt LMS	-0.076	0.182	11.419	0.076	Supported *

Table VIII shows the results of the R-squared ($R^{2)}$ dependent variables in this context. According to Chin (1998), R^2 levels greater than 0.67 are considered strong, R^2values between 0.33 and 0.67 are moderate, R^2values between 0.19 and 0.33 are weak and R^2values less than 0.19 are unsatisfactory [100], [106]. In addition, Falk and Miller (1992) identified a minimum acceptable threshold for R^2 of 0.10 [107]. We found that the R^2values for the intention to adopt LMS and organisational performance variables indicate a moderate impact.

TABLE VIII: ENDOGENOUS LATENT VARIABLES (R^2)

Constructs Relation	R^2	Result
Intention to adopt LMS	0.677	Moderate
Organization Performance	0.535	Moderate

The effect size, as measured by changes in the R^2[106], reflects the relative influence of a specific external latent variable on endogenous latent variables. it is computed as the proportion of unexplained variance in the latent variable to which the path is connected multiplied by the rise in the R-squared value of the latent variable to which the path is related [106]. Table IX shows how changes in the R^2 represent the relative influence. In summary, Cohen (1988) considered that f^2 values greater than 0.35 are significant effect sizes [108]. The impact size of f^2ranges from 0.15–0.35. Note that small impact is defined as an f^2 value of 0.02–0.15. No impact is considered for f^2values that are less than 0.02. The f^2 variables, i.e. individual and environment, show substantial impact sizes of 0. 357 and 0.997, respectively. Note that the technology and organisation variable exhibited a modest impact size (f^2).

TABLE IX: CONSTRUCT REDUNDANCY USING CROSS VALIDATION

Constructs Relation	f2	Result
Individual	0. 357	large effect size
Technology & Organization	0.301	medium effect size
Environment	0.997	large effect size

Note that a measure of predictive capability is required when using Smart PLS for prediction. The blindfolding process is used to determine predictive significance. 'The cross-validation test of Stone (1974) and Geisser (1975) fits soft modelling like hand in glove, Wold (1982, p.30] said [109]-[111]. In this context, D is a predetermined distance value, and the process eliminates data from the dataset. Here, D can be any value between 5–10 [104].

The primary condition is that the sample size (n / D) must be a whole integer. Smart PLS will determine two values, i.e. the cross verified redundancy (cv-red) and cross validated communality (cv-comm) values. According to Fornell and Cha (1994), a cv-red value that is greater than 0 suggests that

the model is predictively relevant, whereas a value of 0 indicates that the model is not predictively relevant [112]. Table X shows that the model considered in this study has appropriate predictive relevance.

TABLE X: CONSTRUCT REDUNDANCY USING CROSS VALIDATION

Constructs	SSO	SSE	Q^2 (=1-SSE/SSO)	
Intention to adopt LMS	270	134.821	0.501	Acceptable/ Predictive relevance
Organization Performance	450	254.036	0.435	

VII. LIMITATIONS AND FUTURE RECOMMENDATIONS

Even though this study followed a strict research methodology, here, we identify potential limitations or flaws that can be investigated in future. As a case study, participants from TU students in Saudi Arabia. The results were based on the number of students who utilised E-learning technologies. As a result, the findings' generalizability to other educational institutions should be approached with care due to variations in the setting. In addition, in this study, we focused on student intent to utilise web-based LMSs; however, the role of staff and faculty in predicting the intent to use LMSs is equally important. Thus, staff and faculty should be considered in future investigations of LMS adoption. Finally, the present study was cross-sectional in nature, with a specific focus on intention at a given time. However, individual views can change over time, which must be considered in future. Thus, a longitudinal study is required to improve our knowledge about causation and the interrelationships among factors that are essential to the adoption LMSs in HEIs in the KSA.

VIII. CONCLUSION

Due to the importance of web-based LMSs, academics have investigated the various factors that influence LMS adoption in order to enhance management and decision-making in companies in terms of both efficiency and effectiveness. From a student's viewpoint, in this paper, we have presented insight into the elements that most affect adoption of LMSs in the Saudi context. The findings of this study are expected to increase student awareness by highlighting the importance of adequate individual, technological and environmental variables for effective web-based LMS adoption. In addition, our findings are expected to increase awareness of the value of LMSs in terms of maintaining educational records and the need for adequate appropriation of individual, technological and environmental aspects relative to effective LMS implementation. SHEI institutions should be aware of the variables that can drive the creation of strategies and establish recommendations for students to adopt an LMS and use it consistently in their studies. We believe believed that our findings may also provide organisations in other fields better understanding of the factors that must be considered for effective system adoption. However, we acknowledge that additional work is required to understand the function of LMSs in decision-making and provide a solid foundation for broad LMS implementation. Nonetheless, we believe that framework proposed in this paper can function as a guide to effective LMS system implementation and acceptance.

CONFLICT OF INTEREST

The author declares no conflict of interest.

ACKNOWLEDGMENT

This research supported by Taibahu University. Their support and consideration are highly appreciated.

REFERENCES

[1] A. H. J. J. O. A. I. T. Rashid, "Research, development of a holistic approach framework for e-learning adoption decision-making in Saudi Arabian universities," 2020, vol. 6, no. 1, pp. 22-36.

[2] T. Favale *et al*., "Campus traffic and e-learning during COVID-19 pandemic," 2020, vol. 176. p. 107290.

[3] F. Kabashi *et al*., *E-Learning Technology in Higher Education: A Review*, 2021, p. 428.

[4] S. Lonn and S. D. J. C. Teasley, "Saving time or innovating practice: Investigating perceptions and uses of learning management systems" 2009, vol. 53, no. 3, pp. 686-694.

[5] E. Bagarukayo and B. J. I. J. O. E. Kalema, "Evaluation of elearning usage in South African universities: A critical review," 2015.

[6] Q. Liu *et al*., "Understanding academics' adoption of learning technologies: A systematic review," 2020, vol. 151, p. 103857.

[7] O. Alharbi and H. J. A. I. S. S. R. J. Alotebi, "External issues affecting teachers' use of technology in Saudi Arabia: Systematic literature review," 2019, vol. 6, no. 1, pp. 202-207.

[8] O. Alharbi *et al*., "Which factors most challenged instructors' integration of technology in KSA education between 2009 and 2019?" *A Systematic Analysis Review*, 2019, vol. 6, no. 12, pp. 198-205.

[9] S. S. Binyamin, M. Rutter, and S. J. I. J. O. E. T. I. L. Smith, "Extending the technology acceptance model to understand students' use of learning management systems in Saudi higher education," 2019, vol. 14, no. 03, pp. 4-21.

[10] S. Binyamin, M. Rutter, and S. Smith, "Factors influencing the students' use of learning management systems: A case study of King Abdulaziz University," presented at International Conference on e-Learning, 2017, Academic Conferences International Limited.

[11] S. Binyamin, M. Rutter, and S. Smith, "The utilization of system usability scale in learning management systems: A case study of Jeddah Community College," in *Proc. the 9th International Conference of Education, Research and Innovation (ICERI2016)*, 2016.

[12] O. Alharbi, V. J. E. J. O. O. E. Lally, and E.-L. Studies, "Adoption of e-learning in Saudi Arabian University education: Three factors affecting educators," 2017.

[13] A. Alammary *et al*., "The impact of the COVID-19 pandemic on the adoption of e-learning among academics in Saudi Arabia," 2021, pp. 1-23.

[14] B. Al-shargabi, O. Sabri, and S. J. P. C. S. Aljawarneh, "The adoption of an e-learning system using information systems success model: A case study of Jazan University," 2021, vol. 7, p. e723.

[15] A. Alharbi *et al*., "Identification of critical factors affecting the students' acceptance of learning management system (LMS) in Saudi Arabia," 2021, vol. 9, no. 2, pp. 353-388.

[16] A. Alzahrani *et al*., "A framework for gamified E-learning systems acceptance in Saudi Arabian universities," 2018.

[17] Y. Kats, "Learning management systems and instructional design: best practices in online education," 2013, IGI Global.

[18] A. A.-F. J. I. J. O. A. I. E. Alshaher, "The McKinsey 7S model framework for e-learning system readiness assessment," 2013, vol. 6, no. 5, p. 1948.

[19] C. Irene *et al.*, "Multimedia in education: Adaptive learning and testing," 2010, World Scientific.

[20] F. Kanwal and M. J. I. A. Rehman, "Factors affecting e-learning adoption in developing countries–empirical evidence from Pakistan's higher education sector," 2017, vol. 5, pp. 10968-10978.

[21] M.-L. Hung, C. J. C. Chou, "Students' perceptions of instructors' roles in blended and online learning environments: A comparative study," 2015, vol. 81, pp. 315-325.

[22] Y. M. J. I. S. J. Cheng, "Antecedents and consequences of e-learning acceptance," 2011, vol. 21, no. 3, pp. 269-299.

[23] J.-L. J. C. Chen, "The effects of education compatibility and technological expectancy on e-learning acceptance," 2011, vol. 57, no. 2, pp. 1501-1511.

[24] B. Anthony *et al*., "Blended learning adoption and implementation in higher education: A theoretical and systematic review," 2020, pp. 1-48.

[25] N. I. J. J. T. J. O. C. Qammach and M. Education, "The impact of critical success factors for e-learning on strategic performance an applied study in a sample of the faculties for the University of Baghdad," 2021, vol. 12, no. 13, pp. 5212-5222.

[26] E. King and R. J. B. J. O. E. T. Boyatt, "Exploring factors that influence adoption of e-learning within higher education," 2015, vol. 46, no. 6, pp. 1272-1280.

[27] B. A. Kurdi *et al*., "Investigating a theoretical framework for e-learning technology acceptance," 2020, vol. 10, no. 6, pp. 6484-6496.

[28] I. A. C. Jimenez *et al*., *Commonly Used External TAM Variables in e-Learning, Agriculture and Virtual Reality Applications*, 2021, vol. 13, no. 1, p. 7.

[29] S. Nordhoff *et al*., "A structural equation modeling approach for the acceptance of driverless automated shuttles based on constructs from the unified theory of acceptance and use of technology and the diffusion of innovation theory," 2021, vol. 78, pp. 58-73.

[30] E. Unal and A. M. J. B. J. O. E. T. Uzun, "Understanding university students' behavioral intention to use Edmodo through the lens of an extended technology acceptance model," 2021, vol. 52, no. 2, pp. 619-637.

[31] T. Buchanan, P. Sainter, and G. J. J. O. C. I. H. E. Saunders, "Factors affecting faculty use of learning technologies: Implications for models of technology adoption," 2013, vol. 25, no. 1, pp. 1-11.

[32] A. S. Khan and A. J. J. E. R. S. Nawaz, "Role of contextual factors in using e-Learning systems for higher education in developing countries," 2013, vol. 1, no. 4, pp. 27-34.

[33] W. Rafique *et al*., *Factors Influencing Programming Expertise in a Web-Based e-Learning Paradigm*, 2020, vol. 24, no. 1, pp. 162-181.

[34] L. Anthonysamy *et al*., "Self-regulated learning strategies in higher education: Fostering digital literacy for sustainable lifelong learning," 2020, vol. 25, pp. 2393-2414.

[35] M. Mukred *et al.*, "The key factors in adopting an electronic records management system (ERMS) in the educational sector: A UTAUT-based framework," 2019, vol. 7, pp. 35963-35980.

[36] S. Taylor and P. A. J. I. S. R. Todd, "Understanding information technology usage: A test of competing models," 1995, vol. 6, no. 2, pp. 144-176.

[37] A. M. Brouwer, K. E. J. N. Mosack, and F. Science, "Expanding the theory of planned behavior to predict healthy eating behaviors: Exploring a healthy eater identity," 2015.

[38] F. D. Davis, R. P. Bagozzi, and P. R. J. M. S. Warshaw, "User acceptance of computer technology: A comparison of two theoretical models," 1989, vol. 35, no. 8, pp. 982-1003.

[39] N. P. Rana *et al.*, "Citizens' adoption of an electronic government system: towards a unified view," 2017, vol. 19, no. 3, pp. 549-568.

[40] Y. K. Dwivedi *et al.*, "A generalised adoption model for services: A cross-country comparison of mobile health (m-health)," 2016, vol. 33, no. 1, pp. 174-187.

[41] V. Venkatesh *et al*., "User acceptance of information technology: Toward a unified view," 2003, pp. 425-478.

[42] C. M. J. S. Barrette, "Usefulness of technology adoption research in introducing an online workbook," 2015, vol. 49, pp. 133-144.

[43] M. R. Hoque *et al.*, "Factors influencing physicians' acceptance of e-health in developing country: An empirical study," 2016, vol. 11, no. 1, pp. 58-70.

[44] B. C. J. L. P. Atulomah, "Perceived records management practice and decision making among university administrators in Nigeria," 2011, vol. 1, no. 1, pp. p7-13.

[45] S. A. Salloum and K. Shaalan, "Factors affecting students' acceptance of e-learning system in higher education using UTAUT and structural equation modeling approaches," presented at International Conference on Advanced Intelligent Systems and Informatics, 2018, Springer.

[46] M. Mukred *et al*., "Improving the decision-making process in the higher learning institutions via electronic records management system adoption," 2021, vol. 15, no. 1, pp. 90-113.

[47] M. Mukred *et al.*, "A framework for electronic records management system adoption in the higher professional education: Individual, technological and environmental factors," presented at International Conference of Reliable Information and Communication Technology, 2018, Springer.

[48] B. Hawash *et al*., *A Conceptual Framework for the Adoption of Electronic Records Management System in the Yemeni Oil and Gas Sector*, 2020.

[49] M. Mukred, Z. M. Yusof, and F. M. J. I. A. Alotaibi, "Ensuring the productivity of higher learning institutions through electronic records management system (ERMS)," 2019, vol. 7, pp. 97343-97364.

[50] S. Aljarboa, S. J. Miah, and D. J. W. M. Kerr, "Perceptions of the adoption of clinical decision support systems in the Saudi healthcare sector," 2019, p. 42.

[51] J. Dedrick and J. West, "An exploratory study into open source platform adoption," presented at 37th Annual Hawaii International Conference on System Sciences, 2004, IEEE.

[52] V. Venkatesh, J. Y. Thong, and X. J. M. Q. Xu, "Consumer acceptance and use of information technology: Extending the unified theory of acceptance and use of technology," 2012, pp. 157-178.

[53] S. S. J. C. Almubarak, "Factors influencing the adoption of cloud computing by Saudi university hospitals," 2017, vol. 8, no. 1.

[54] O. Harfoushi *et al*., "Factors affecting the intention of adopting cloud computing in Jordanian hospitals," *Communications and Network*, 2016, vol. 8, no. 02, p. 88.

[55] V. P. Aggelidis and P. D. J. I. J. O. M. I. Chatzoglou, "Using a modified technology acceptance model in hospitals," 2009, vol. 78, no. 2, pp. 115-126.

[56] M. Al-Emran, H. M. Elsherif, and K. J. C. I. H. B. Shaalan, "Investigating attitudes towards the use of mobile learning in higher education," 2016, vol. 56, pp. 93-102.

[57] F. A. Moafa *et al.*, *Factors for Minimizing Cyber Harassment among University Students: Case Study in Kingdom of Saudi Arabia (KSA)*, 2018, vol. 96, no. 6.

[58] M. Alghizzawi *et al*., "The effect of social media usage on students'e-learning acceptance in higher education: A case study from the United Arab Emirates," 2019, vol. 3, no. 3, pp. 13-26.

[59] G. E. Ali and R. J. I. J. O. T. Magalhaes, "Development, Barriers to implementing e-learning: A Kuwaiti case study," 2008, vol. 12, no. 1, pp. 36-53.

[60] Y. Osman, "Implementation of e-learning in the University of Gezira barriers and opportunities," 2017.

[61] A. Y. Alsabawy, A. Cater-Steel, and J. J. C. I. H. B. Soar, "Determinants of perceived usefulness of e-learning systems," 2016, 64, pp. 843-858.

[62] M. A. Nugroho, P. W. Dewanti, and B. T. Novitasari, "The impact of perceived usefulness and perceived ease of use on student's performance in mandatory e-learning use," presented at 2018 International Conference on Applied Information Technology and Innovation (ICAITI), 2018, IEEE.

[63] W. M. Al-Rahmi *et al*., "Integrating technology acceptance model with innovation diffusion theory: An empirical investigation on students' intention to use e-learning systems," 2019, vol. 7, pp. 26797-26809.

[64] S. I. Zoubi and A. I. J. E.-L. Alzoubi, "E-learning benchmarking adoption: A case study of Sur University College," 2019, vol. 10, no. 11, pp. 463-470.

[65] A. Ray, P. K. Bala, and Y. K. J. J. O. S. M. Dwivedi, "Exploring values affecting e-learning adoption from the user-generated-content: A consumption-value-theory perspective," 2021, vol. 29, no. 5, pp. 430-452.

[66] B. Rahmi, B. Birgoren, and A. J. T. O. J. O. D. E. Aktepe, "A meta analysis of factors affecting perceived usefulness and perceived ease of use in the adoption of e-learning systems," 2018, vol. 19, no. 4, pp. 4-42.

[67] R. N. Kibuku, D. O. Ochieng, and A. N. J. E. J. O. E.-L. Wausi, *E-Learning Challenges Faced by Universities in Kenya: A Literature Review*, 2020, vol. 18, no. 2, pp. 150-161.

[68] K. Hadullo *et al*., "Factors affecting asynchronous e-learning quality in developing countries university settings," 2018, vol. 14, no. 1.

[69] M. M. Alamri *et al*., *Towards Adaptive e-Learning among University Students: By Applying Technology Acceptance Model (TAM)*, 2019, vol. 7, p. 10.

[70] L. Abbacan-Tuguic, *Challenges of the New Normal: Students' Attitude, Readiness and Adaptability to Blended Learning Modality*, 2021.

[71] N. G. Uğur and A. H. J. B. Turan, "E-learning adoption of academicians: a proposal for an extended model," 2018, vol. 37, no. 4, pp. 393-405.

[72] T. J. T. E. Bøe, "E-learning technology and higher education: the impact of organizational trust," 2018, vol. 24, no. 4, pp. 362-376.

[73] F. Kanwal *et al*., "Critical factors of e-learning adoption and acceptance in Pakistan: A literature review," 2017, vol. 7, no. 4, pp. 1888-1893.

[74] M. A. Almaiah *et al*., "Exploring the critical challenges and factors influencing the E-learning system usage during COVID-19 pandemic," 2020, vol. 25, pp. 5261-5280.

[75] A. J. Karkar, H. K. Fatlawi, and A. A. J. E. J. O. E.-L. Al-Jobouri, *Highlighting E-learning Adoption Challenges Using Data Analysis Techniques: University of Kufa as a Case Study*, 2020, vol. 18, no. 2, pp. 136-149.

[76] G. Mesfin *et al*., "Enhanced agility of e-learning adoption in high schools," 2018, vol. 21, no. 4, pp. 157-170.

[77] M. Kayali and S. J. I. J. C. M. I. T. Alaaraj, *Adoption of Cloud Based E-learning in Developing Countries: A Combination A of DOI, TAM and UTAUT*, 2020, vol. 1, no. 1, p. 1-7.

[78] P. Ngulube, B. J. S. A. J. O. E. Ngulube, and M. Sciences, "Mixed methods research in the South African Journal of Economic and Management Sciences: An investigation of trends in the literature," 2015, vol. 18, no. 1, pp. 1-13.

[79] M. Ş. J. I. J. O. B. Ensari, "A research related to the factors affecting competitive strategies of SMEs operating in Turkey," 2016, vol. 7, no 2, pp. 73-80.

[80] J. Webster and R. T. J. M. Q. Watson, "Analyzing the past to prepare for the future: Writing a literature review," 2002, pp. xiii-xxiii.

[81] M. Maguire and B. J. A. I. J. O. H. E. Delahunt, "Doing a thematic analysis: A practical, step-by-step guide for learning and teaching scholars," 2017, vol. 9, no. 3.

[82] M. A. Al-Sharafi, R. A. Arshah, and E. A. Abu-Shanab, "Factors influencing the continuous use of cloud computing services in organization level," in *Proc. the International Conference on Advances in Image Processing*, 2017.

[83] W. R. King and J. J. C. O. T. A. F. I. S. He, "Understanding the role and methods of meta-analysis in IS research," 2005, vol. 16, no. 1, p. 32.

[84] D. Compeau, C. A. Higgins, and S. J. M. Q. Huff, "Social cognitive theory and individual reactions to computing technology: A longitudinal study," 1999, pp. 145-158.

[85] P. Duyck *et al.*, "User acceptance of a picture archiving and communication system," 2008, vol. 47, no. 02, pp. 149-156.

[86] N. Shi and D. J. A. S. C. P. Bennett, "Requisite IS management knowledge and skills construct: A survey," 1998, vol. 19, no. 1, pp. 3-19.

[87] F. Mohammed *et al*., "Factors influencing cloud computing adoption for e-government implementation in developing countries: Instrument development," *Journal of Systems and Information Technology*, 2016.

[88] P. D. Chatzoglou *et al*., "Investigating Greek employees' intention to use web-based training," 2009, vol. 53, no. 3, pp. 877-889.

[89] J. Verville and A. J. M. D. Halingten, "An investigation of the decision process for selecting an ERP software: The case of ESC," 2002.

[90] A. S. Jadhav and R. M. J. I. Sonar, "Evaluating and selecting software packages: A review," 2009, vol. 51, no. 3, pp. 555-563.

[91] Y. A. Alsultanny and F. M. J. I. J. O. G. C. Alnassar, "Evaluating factors motivate users on Green IT readiness (Part 2)," 2017, vol. 8, no. 1, pp. 23-35.

[92] R. Yalcinkaya, "Police officers' adoption of information technology: A case study of the Turkish POLNET system. 2007: University of North Texas".

[93] G. O. Boateng *et al*., "Best practices for developing and validating scales for health, social, and behavioral research: A primer," 2018, vol. 6. p. 149.

[94] S. Dashti *et al.*, "E-Health literacy of medical and health sciences university students in Mashhad, Iran in 2016: A pilot study," 2017, vol. 9, no. 3, p. 3966.

[95] N. L. Leech, K. C. Barrett, and G. A. Morgan, *IBM SPSS for Intermediate Statistics: Use and Interpretation*, 2014: Routledge.

[96] N. H. Nle *et al*., "Statistical package for the social sciences," 1975.

[97] N. Leech, K. Barrett, and G. A. Morgan, *SPSS for Intermediate Statistics: Use and Interpretation*, 2013, Routledge.

[98] J. F. Hair, C. M. Ringle, and M. J. M. Sarstedt, *PLSSEM: Indeed a Silver Bullet Journal of Marketing Theory and Practice*, vol. 19, no. 2, pp. 139-152, doi: 10.2753. 2011.

[99] J. P. Stevens, "Applied multivariate statistics for the social sciences," 2012, Routledge.

[100] J. F. Hair Jr. *et al*., "Partial least squares structural equation modeling (PLS-SEM): An emerging tool in business research," 2014.

[101] J. F. Hair Jr. *et al*., "A primer on partial least squares structural equation modeling (PLS-SEM)," 2021, Sage publications.

[102] J. Henseler, C. M. Ringle, and M. J. J. O. T. A. O. M. S. Sarstedt, "A new criterion for assessing discriminant validity in variance-based structural equation modeling," 2015, vol. 43, no. 1, pp. 115-135.

[103] C. Fornell and D. F. Larcker, *Structural Equation Models with Unobservable Variables and Measurement Error: Algebra and Statistics*, 1981, Sage Publications Sage CA: Los Angeles, CA.

[104] W. W. Chin, "How to write up and report PLS analyses," *Handbook of Partial Least Squares*, 2010, Springer, pp. 655-690.

[105] T. Ramayah *et al.*, "Factors influencing SMEs website continuance intention in Malaysia," 2016, vol. 33, no. 1, pp. 150-164.

[106] W. W. Chin, "Commentary: Issues and opinion on structural equation modeling," 1998, JSTOR.

[107] R. F. Falk and N. B. Miller, *A Primer for Soft Modeling*, 1992, University of Akron Press.

[108] S. R. Schmidt and J. N. Bohannon," In defense of the flashbulb-memory hypothesis: A comment on McCloskey, Wible, and Cohen (1988)," 1988.

[109] S. Wold, H. Martens, and H. Wold, "The multivariate calibration problem in chemistry solved by the PLS method, in Matrix pencils," 1983, Springer, pp. 286-293.

[110] M. J. J. O. T. R. S. S. S. B. Stone, "Cross-validatory choice and assessment of statistical predictions," 1974, vol. 36, no. 2, pp. 111-133.

[111] S. J. J. O. T. A. S. A. Geisser, "The predictive sample reuse method with applications," 1975, pp. 320-328.

[112] C. Fornell and J. J. A. A. Cha, *Partial Least Squares (PLS)*, 1993.

Copyright © 2022 by the authors. This is an open access article distributed under the Creative Commons Attribution License which permits unrestricted use, distribution, and reproduction in any medium, provided the original work is properly cited (CC BY 4.0).

Asmaa Hatem Rashid Abogamous received the PhD degree in information systems from University of Malaya, Kuala Lumpur, Malaysia, in 2014 and the M.S. degree in information Systems from Arab Academy for Science Technology & Maritime Transport (AASTMT), Cairo, Egypt, in 2010. Besides the higher diploma degree in information Systems from Arab Academy for Science Technology & Maritime Transport (AASTMT), Cairo, Egypt, 2007. and received the B.S. degree in computer sciences and informatics in 2006 from Cairo University. She is currently assistant professor in Applied Collage, Taibahu University, Madinah Almawraa, Kingdom of Saudi Arabia (KSA). Her research interest includes the development of systems in healthcare sector and education environments, collaboration of data, privacy preservation, cloud computing and information systems.