The Study of Temperature Difference of Thermoelectric on PIC-Microcontroller

N. Sangwaranatee and N. W. Sangwaranatee

***Abstract*—This research investigated the producing of electric power generated by the temperature difference below 100 ˚C of thermoelectric effect or cooling devices getting power from direct current and the electromotive force from thermoelectric module. In this research, a testing kit was designed to collect the output of temperature difference on the thermoelectric device, and compared the level of electric power of various modules in 2 different circuits, i.e. serial and parallel. The results of the study showed that the higher the differential temperature, the higher amount of electric power and the electromotive force. Also, the electrical connection of thermoelectric module had an effect on power generating when using 2 modules for each circuit, the serial circuit generated more power than that of the parallel circuit.**

***Index Terms*—Thermoelectric, microcontroller, peltier module.**

I. Introduction

A thermoelectric module is a semiconductor-based electronic component that functions as a small heat pump [1]. When applying the electric current voltage into the thermoelectric made in PN junction semiconductor, it can generate electric power from its temperature difference. On the contrary, thermoelectric module also creates temperature difference by itself while receiving power from the generator. There are several outstanding advantages of thermoelectric module. Since it is small and works quietly due to its immobility, it can save the maintenance cost. More importantly, power generated from thermoelectric source is one of the clean energy sources and can be used conveniently and effectively in remote areas [2].

In order to find out the accurate result of how thermoelectricity produces power in different times, proper testing kits are needed. The result collected from this study is analyzed and used as the alternative way to generate power for the future use.

II. Thermoelectric Module

Thermoelectric modules are made of semiconductor substance. When applying some DC voltage to the P-N thermoelectric module, the voltage moving through the different semiconductor substances creates the electromotive force (emf) and temperature differences between both sides.

Manuscript received April 15, 2014; revised July 15, 2014. This work was supported in part by Suan Sunandha Rajabhat University, Bangkok, Thailand.

The authors are Suan Sunandha Rajabhat University, Bangkok, Thailand (e-mail: narong.sa@ssru.ac.th).

When applying EMF through the N type semiconductor, there is the flow of electron from the anode to the cathode of the power generator. At the same time, it absorbs heat from the cathode of the semiconductor and releases the heat at the anode [3].

The Hole flow of P-type semiconductor goes to the different side from the electron of N-type semiconductor. The hole flow goes from anode to cathode when applying the voltage into the P-type. The heat is absorbed at the action and released at the anion. It's a remarkable reaction of this semiconductor and perfect for thermoelectric modules as shown in Fig. 1.

Thermoelectric Cooler is the cooling system using thermoelectric element. It is also called "Heat Pump". This thermoelectric element pumps the heat from one side to another very rapidly. This means the thermoelectric element has the cold side (the side that heat is pumped out of) and the hot side (the side that heat is released to). The work of this thermoelectric device needs a lot of electric voltage, so it doesn't pump heat quite satisfyingly. The temperature of the hot side is more than the cold side due to the high amount of voltage use. Despite this conflict, thermoelectric module is still preferable for the over clock circle because it can easily turn the temperature of the cold side down to below zero. Basically, the temperature difference in thermoelectric module is from 50 ^{0}C - 70 ^{0}C, or up to 120 ^{0}C in a high-quality thermoelectric module.

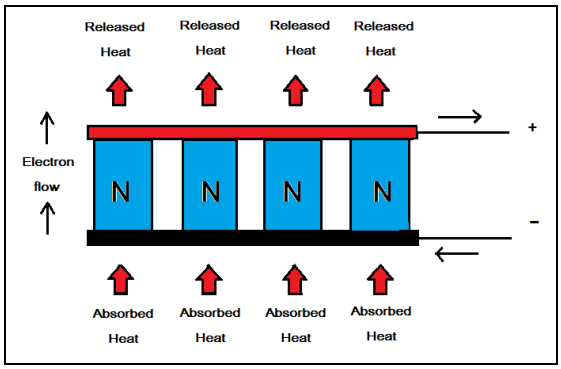

Fig. 1. Thermoelectric module.

In order to make the cold side of thermoelectric module works effectively, a heat sink is usually installed on the hot side. Heat sink can absorb the heat from the hot side and release it better via the ventilators. The more heat the hot side can release, the more effective the cold side is.

Single-Stage Thermoelectric Module

This type of Thermoelectric Module has only one stage and low temperature difference of the hot side and cold side. The temperature is around 67 ^{o}C, taken when there is no heat load. There are various formats, sizes and looks of

single-stage thermoelectric modules. They also have different qualifications in terms of electromotive force volume, voltage and levels of cooling ability, for different usage as presented in Fig. 2.

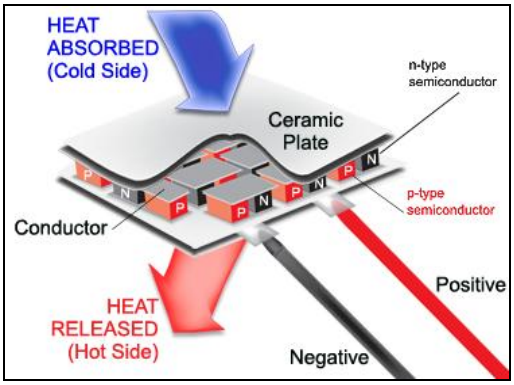

Fig. 2. Single-stage thermoelectric module.

A. Semiconductor Connection

It is convenient to use the N-type semiconductors in thermoelectric module. The flow from the hot side to cold side is controllable. However, the only limited factor of the N-type is that it has very low electromotive force: only 10mV per one set. In order to have the expected volume of electromotive force, many N-type semiconductor substances must be connected in series. However, connecting the N-type this way can affect heat control and coolness flow. Some of the heat goes back to the cold side along the action and anion wire, which can cause the short circuit. If this happens, it is hard to prevent heat reflux [4].

Thus, the most effective way to connect the semiconductors in thermoelectric modules is to connect the P-type and N-type in pairs. They are connected in series for the desirable voltage, and in parallel for better heating and cooling system.

B. Thermoelectric Power Generation

The equation to find out the rank of heat for thermoelectric module (Q_H), Amount of heat releasing from the module (Q_c), the received power (P) and heat efficiency (η) can be solved by this [5].

$$Q_H = n\left[\alpha T_H I - 0.5I^2R + K(T_H - T_C)\right] \quad (1)$$

$$Q_C = n\left[\alpha T_C I - 0.5I^2R + K(T_H - T_C)\right] \quad (2)$$

$$P = IV \quad (3)$$

$$Power_{max} = I^2(R_i + R_L)\ ;\ \text{As} \quad R_i = R_L \quad (4)$$

$$\eta = \frac{P}{Q_H} \quad (5)$$

III. Microcontroller

A microcontroller is a small controlling device. Inside a microcontroller contains CPU, memory and port, which is similar to a typical computer.

Fig. 3 demonstrates analog-to-digital signal converter module in PIC microcontroller with program C.

In using signal converter module written in C language, the CCS C Compiler has the analog-to-digital converting and the translating functions. The example of circuits is shown below in Fig. 4.

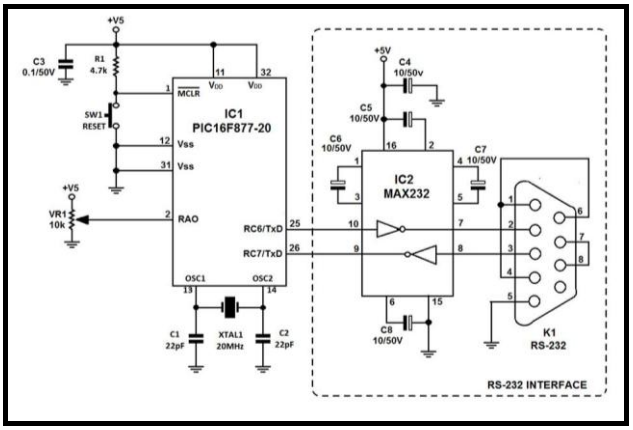

Fig. 3. The analog-to-digital converting module of PIC 16F877.

Temperature Detecting by IC Number DS1820

This is the communication device connected in series circuit with single cable. There is a controlling device as the bus controller in the circuit, which is the microcontroller.

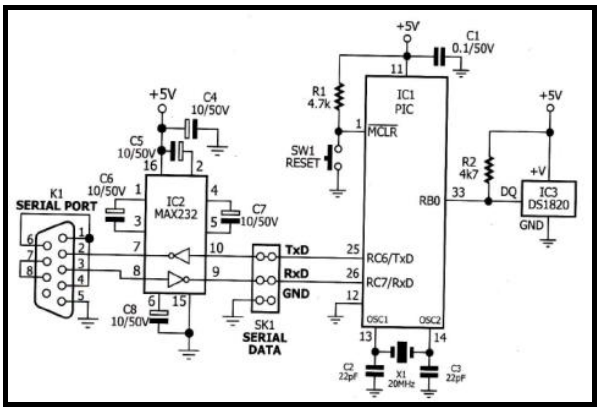

Fig. 4. The simulated circuit of IC DS1820 from the PIC Microcontroller.

IV. The Process of Writing Computer Programs

Fig. 5 shows the process of writing computer programs.

Step 1: we studied about the work of the microcontroller circuit and how well it connects to internet through the network.

Step 2 and 3: the study stepped up to learning the C language which will be used in many factors here, such as, writing computer programs used in the microcontroller and connecting to the hardware. Also, using CCS C Compiler as the c language translator on PIC microcontroller was in this step. The study proves that the compiler can convert the signal into .Hex files. This .Hex file will be input in IC by the board load program.

In this step, we started writing program in C language in 3 sub sections. The first one was to convert analog signal to digital signal. Second one was writing the 1-wire temperature bus control. The last one was to write the control part of computer connection which will be connected by Network Communicate on Lan.

Step 4, the last step of the study, was the one where we used visual basic as the result display. It was how we use the basic language to write programs by GUI (Graphic User Interface), which is the memory collector from microcontroller board from the network on the TCP/IP standard. This program works as Client Sever. Programs written by Visual Basic works as sever retrieving data from the microcontroller on the network, which works as client. In this step, IP address was the reference of the client.

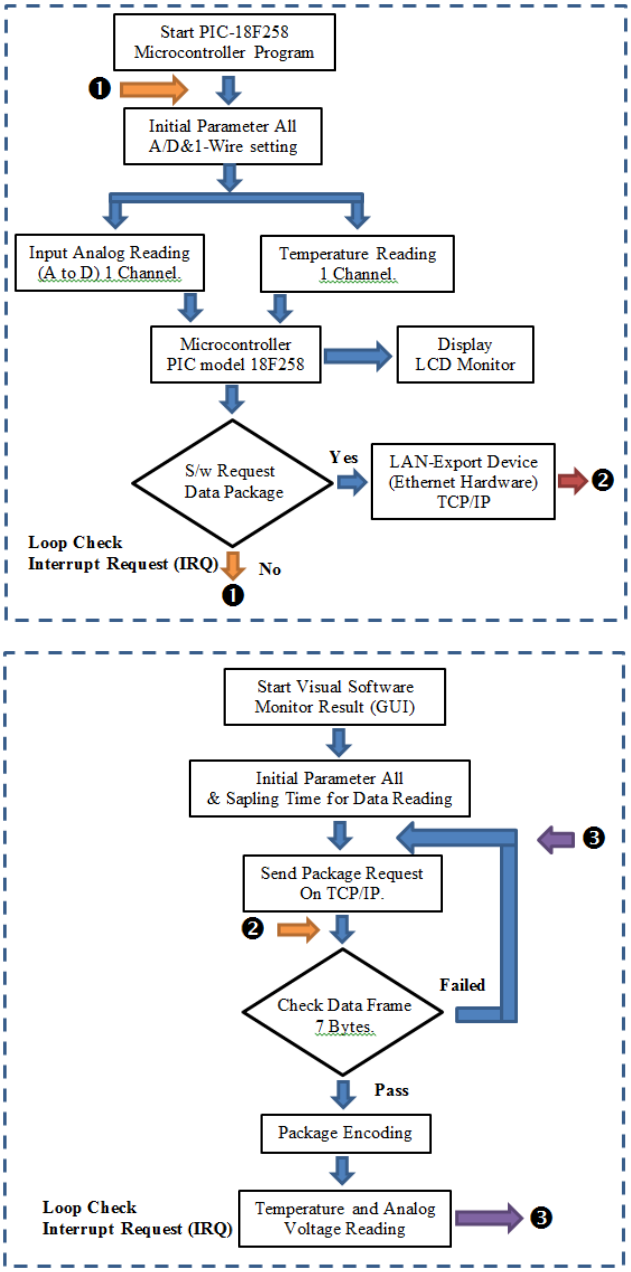

Fig. 5. The process of writing computer programs.

V. The Result of Thermoelectric Modules' Temperature Difference

The display of how results are collected during the study by designed program is presented in Fig. 6 and full assembly of the experimental set-up is presented in Fig. 7.

From the study, we the temperature from the hot and the cold side of thermoelectric modules. From Fig. 8, we'll see that the more different the temperature between both sides, the more power generated, as in equation (3).

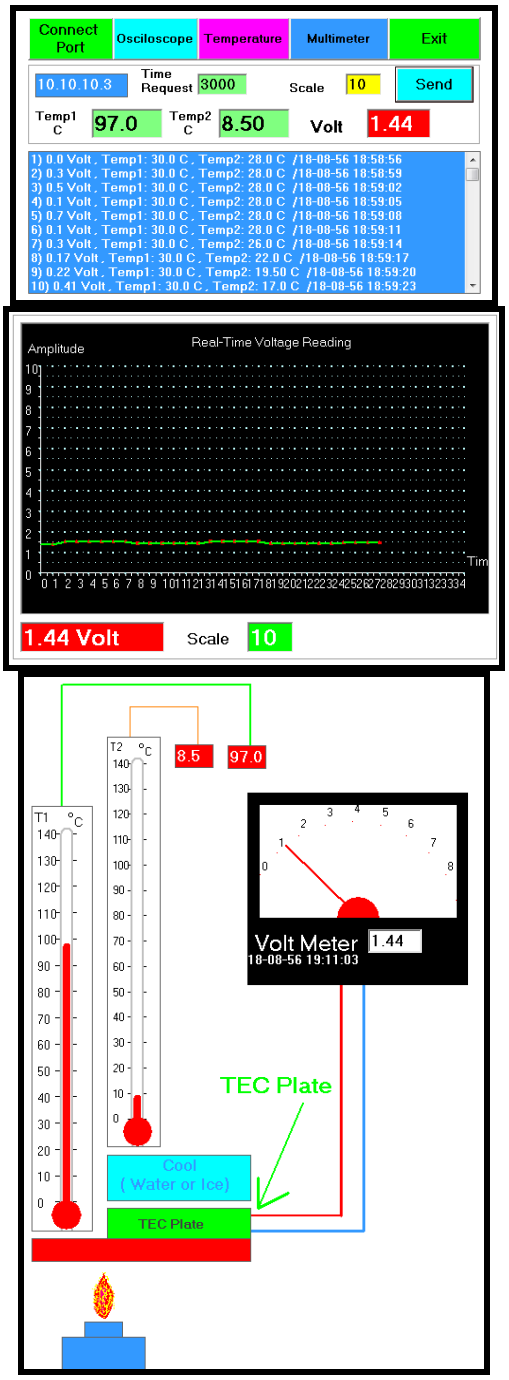

Fig. 6.The display of how results are collected during the study by designed program.

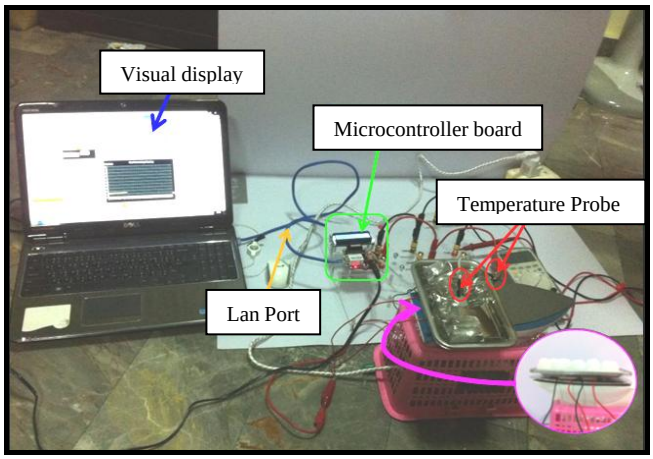

Fig. 7. Full assembly of the experimental set-up.

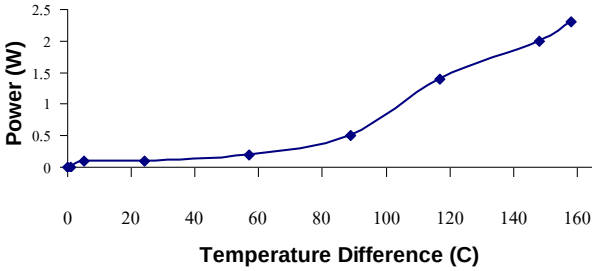

Fig. 8. The diversity of power and temperature difference of thermoelectric module.

VI. Conclusion

This is the study concerning the temperature difference of thermoelectric pad, using Visual Basic Program in C Language on PIC Microcontroller in order to find out the volume of power generation from one thermoelectric module. From the study, we found out that the volume of electromotive force was high when the temperature difference between thermoelectric pads was also high. Also, when we increased the amount of thermoelectric pads to two modules and connect them in 2 different circuits; the series and parallel, the result showed that there was more electromotive force generated from the module when it was connected in series circuit.

Acknowledgment

The authors would like to thank Research and Development Institute of Suan Sunandha Rajabhat University, Thailand for providing a financial fund for this research.

References

[1] M. S. Dresselhaus *et al*., "New directions for low-dimensional thermoelectric materials," *Advanced Materials*. vol. 19, pp. 1043-1053, April 2007.

[2] S. B. Riffat and X. Ma, "Improving the coefficient of performance of thermoelectric cooling systems," *International Journal of Energy Research*, vol. 28, pp. 753-768, July.2004.

[3] T. J. Park, Y. C. Choi, B. J. Choi, J. C. Hong, J. S. Park, and D. M. Rowe, "Research on the waste heat recovery technology using thermoelectric generation," presented at 19th International Conference on Thermoelectrics, Cardiff, UK 313-316, 2000

[4] K. Chen and S. B. Gwilliam "An analysis of heat transfer rate and efficiency of TE (thermoelectric) cooling systems," *International Journal of Energy Research*, vol. 20, pp. 399-417, 1996.

[5] N. Sangwaranatee, "The Study of cook-stove thermoelectric generator power," *Advanced Materials Research*, vol. 979, pp. 421-425, July, 2014.

N. Sangwaranatee was born in 1981, at Phetchaboon province, Thailand. He received bachelor's degree in physics from Thepsatri Rajabhat University, Lopburi, Thailand. He obtained master's and PhD degrees in applied physics from King Mongkut's Institute of Technology Ladkrabang, Bangkok, Thailand. Currently, he is working as a lecturer at the Department of Applied Physics, Faculty of Science and Technology, Suan Sunandha Rajabhat University, Bangkok, Thailand. His research is focused on optics and educational technology.

N. W. Sangwaranatee was born in 1981, at Nakronratchasima province, Thailand. She received bachelor's, master's degrees and PhD degree in applied mathematics from King Mongkut's Institute of Technology Ladkrabang, Bangkok, Thailand. Currently, she is working as a lecturer at the Department of Informatics Mathematics, Faculty of Science and Technology, Suan Sunandha Rajabhat University, Bangkok, Thailand. Her research is focused on mathematical modeling operations research and educational technology.